V2.2 2026-05-25

Commercial and Industrial Smart Inverter

ET Series 12-30kW

· Lynx C Series Commercial and Industrial Battery 60kWh

· BAT-C Series Commercial and Industrial Battery 61.4-112.6kWh

· BAT-S Series High-Voltage Battery 15.3-56.3kWh

Solutions Manual

GOODWE

Copyright Statement

Copyright Statement

All Rights Reserved© GoodWe Technologies Co., Ltd. 2026. All rights reserved.

Without authorization from GoodWe Technologies Co., Ltd., no content of this manual may be reproduced, disseminated, or uploaded to public networks or other third-party platforms in any form.

Trademark Authorization

GOODWE and other GOODWE trademarks used in this manual are the property of GoodWe Technologies Co., Ltd. All other trademarks or registered trademarks mentioned in this manual belong to their respective owners.

NOTICE

Due to product version upgrades or other reasons, the content of this document is updated periodically. Unless otherwise agreed, the content of this document cannot replace the safety precautions on the product label. All descriptions in this document are for guidance only.

About This Manual

Overview

This document primarily introduces the product information, installation wiring, configuration and commissioning, troubleshooting, and maintenance content for the energy storage system composed of inverters, the Battery system, and smart meters. Please read this manual carefully before installing and using the product to understand product safety information and familiarize yourself with the product's functions and features. The document may be updated periodically; please obtain the latest version of the materials and more product information from the official website.

Applicable Model

The energy storage system includes the following products:

Product Type	Product Information	Description
Inverter	ET 12-30kW	Nominal output power 12kW to 30kW.
Battery system	Lynx C series 60kWh commercial and industrial battery system	Single cluster storage capacity 60kWh. Parallel cluster storage capacity up to 180kWh.
	BAT-S series 15.3-56.3kWh high-voltage battery	Single cluster storage capacity 15.3/20.4/25.6/30.7/35.8/40.9/46.0/51.2/56.3 kWh. Parallel cluster storage capacity up to 91.8/122.4/153.6/184.2/214.8/245.4/276.0/307.2/337.8 kWh.

Product Type	Product Information	Description
	BAT-C series 61.4-112.6kWh commercial and industrial battery system	Single cluster storage capacity 61.4/92.1/102.4/112.6kWh.
Meter	GM3000	Monitoring module in the energy storage system, capable of detecting operating voltage, current, and other information in the system.
	GM330	
	GMK330	
smart dongle	WiFi/LAN Kit-20	Can upload system operating information to the monitoring platform via WiFi or LAN signals.
	LS4G Kit-CN, 4G Kit-CN, 4G Kit-CN-G20 or 4G Kit-CN-G21 (China only)	Can upload system operating information to the monitoring platform via 4G signals.
	Wi-Fi Kit	Can upload system operating information to the monitoring platform via WiFi signals.
	Ezlink3000	In parallel machine scenarios, connected to the main inverter. Can upload system operating information to the monitoring platform via WiFi or LAN signals.

Symbol Definition

⚠DANGER
Indicates a situation with a high potential hazard, which, if not avoided, will result in death or serious injury.
⚠WARNING

Indicates a situation with a moderate potential hazard, which, if not avoided, could result in death or serious injury.
⚠CAUTION
Indicates a situation with a low potential hazard, which, if not avoided, could result in moderate or minor injury.
NOTICE
Emphasis and supplement to the content, which may also provide tips or tricks for optimal product use, helping you solve a problem or save your time.

Table of Contents

1 Safety Precautions 12
1.1 General Safety 12
1.2 personnel requirements 13
1.3 System Safety 13
1.3.1 PV String Safety 15
1.3.2 Inverter Safety 16
1.3.3 Battery Safety 17
1.3.4 Smart Meter Safety 19
1.4 Safety Symbols and Certification Marks 20
1.5 EU Declaration of Conformity 21
1.5.1 Equipment with Wireless Communication Modules 21
1.5.2 Equipment without Wireless Communication Modules (Except Battery) 22
1.5.3 Battery 22
2 System Introduction 24
2.1 System Overview 24
2.2 Product Overview 29
2.2.1 Inverter 29
2.2.2 Battery 31
2.2.2.1 Lynx C Series 60kWh C&I Battery System 32
2.2.2.2 BAT-S Series 15.3-56.3kWh High Voltage Battery 33
2.2.2.3 BAT Series 61.4-112.6kWh C&I Battery System 37

2.2.3 Smart Meter 48
2.2.4 smart dongle 49
2.3 Supported Grid Types 50
2.4 System Working Mode 51
2.5 Features 61
3 Check and Storage 65
3.1 Check Before Receiving 65
3.2 deliverables 65
3.2.1 Inverter Deliverables 65
3.2.2 Batteries Deliverables 68
3.2.2.1 Lynx C Series 60kWh C&I Battery System 68
3.2.2.2 BAT-S Series 15.3-56.3kWh High Voltage Battery 72
3.2.2.3 BAT Series 61.4-112.6kWh C&I Battery System 76
3.2.3 Smart Meter Deliverables (GM3000) 77
3.2.4 Smart Meter Deliverables GM330 & GMK330 78
3.2.4.1 Accessory List 78
3.3 Storage 79
4 Installation 82
4.1 System Installation and Commissioning Procedure 82
4.2 Installation Requirements 83
4.2.1 Installation Environment Requirements 83
4.2.2 Foundation Requirements 86

4.2.3 Installation Space Requirements 87
4.2.4 Tool Requirements 89
4.3 Equipment Handling 91
4.4 Installing the Inverter 95
4.5 Installing the Battery System 99
4.5.1 Opening the Cabinet Door 99
4.5.2 Installing the Lynx C Series 60kWh C&I Battery System 100
4.5.3 Installing the BAT-S Series 15.3-56.3kWh High Voltage Battery 101
4.5.4 Installing the BAT Series 61.4-112.6kWh C&I Battery System 105
4.6 Installing the Smart Meter 107
5 System Wirings 109
5.1 System Wiring Electrical Block Diagram 109
5.2 Detailed System Wiring Diagram 112
5.2.1 Detailed System Wiring Diagram for Single Inverter 113
5.2.2 Detailed System Wiring Diagram for Parallel System 118
5.3 Preparing Materials 121
5.3.1 Preparing Breakers 122
5.3.2 Preparing Cables 126
5.3.3 Removing the Cover Plate 129
5.4 Connecting the PE cable 131
5.4.1 Inverter Grounding 132
5.4.2 Battery System Grounding 132

5.5 Connecting the PV Cable 133

5.6 Connecting the Battery System Cables 135

5.6.1 With Lynx C Series 60kWh C&I Battery System 139

5.6.1.1 Battery Cable Entry Port Introduction 139

5.6.1.2 Connecting the Power Cable between the Inverter and Battery 140

5.6.1.3 Connecting the Battery Communication Cable 144

5.6.1.4 Connecting the Internal Power Busbars of the Battery System 146

5.6.1.5 Connecting the Air Conditioner Power Cable for the Battery System 147

5.6.1.6 Connecting the Air Conditioner Drain Pipe for the Battery System 148

5.6.1.7 Turning On the Fire Protection Switch 148

5.6.1.8 Installing the Cover Plate 150

5.6.2 With BAT-S Series 15.3-56.3kWh High Voltage Battery 150

5.6.2.1 Connecting the Power Cable between the Inverter and Battery 151

5.6.2.2 Connecting the Power Cable between Battery Units 154

5.6.2.3 Connecting the Communication Cable 154

5.6.3 With BAT Series 61.4-112.6kWh C&I Battery System 156

5.6.3.1 Battery Cable Entry Port and System Wiring Introduction 157

5.6.3.2 Connecting the Power Cable between the Inverter and Battery 158

5.6.3.3 Connecting the Battery Communication Cable 158

5.6.3.4 Connecting the Battery Air Conditioner Cable 159

5.6.3.5 Installing the Bottom Plate and Releasing the Emergency Stop Switch 160

5.7 Connecting the AC Cable 161
5.8 Connecting the Meter Cable 162
5.9 Connecting the Inverter Communication Cable 167
5.10 Connecting the Smart Dongle 174
6 System Commissioning 177
6.1 Check Before Power ON 177
6.2 Power ON 177
6.3 Indicators 179
6.3.1 Inverter Indicators 179
6.3.2 Battery Indicators 180
6.3.3 Smart Meter Indicator 182
6.3.4 Smart Dongle Indicator 183
6.4 Closing the Cabinet Door 187
7 System Commissioning & Power Plant Monitoring 190
7.1 Device Commissioning and Power Plant Monitoring via SEMS+ App 190
7.2 Device Commissioning and Power Plant Monitoring via SEMS+ WEB 191
8 Maintenance 193
8.1 Power OFF the System 193
8.2 Removing the Equipment 194
8.3 Disposing of the Equipment 195
8.4 Routine Maintenance 195
8.5 fault 196

8.5.1 Viewing Fault/Alarms Information 196
8.5.2 Fault Information and Troubleshooting 197
8.5.2.1 System Fault 197
8.5.2.2 Inverter Fault 199
8.5.2.2.1 Troubleshooting (Fault Code F01-F40) 199
8.5.2.2.2 Troubleshooting (Fault Code F41-F80) 216
8.5.2.2.3 Troubleshooting (Fault Code F81-F121) 225
8.5.2.2.4 Troubleshooting (Fault Code F122-F163) 235
8.5.2.2.5 Troubleshooting Fault Phenomena 245
8.5.2.3 Battery Fault 263
8.5.3 Post-Fault Clearance Handling 278
8.5.3.1 Clearing AFCI Fault Warning 278
9 technical parameter 280
9.1 Inverter Parameters 280
9.2 Battery Parameters 295
9.2.1 Lynx C Series 60kWh C&I Battery System 295
9.2.2 BAT-S Series 15.3-56.3kWh High Voltage Battery 297
9.2.3 BAT-C Series 61.4-112.6kWh C&I Battery System 303
9.3 Smart Meter Technical Data 307
9.3.1 GM330 307
9.3.2 GM3000 308
9.3.3 GMK330 309

9.4 Smart Dongle Technical Data 310
9.4.1 4G Kit-CN-G21 311
9.4.2 4G Kit-CN-G20 312
9.4.3 WiFi/LAN Kit-20 313
9.4.4 Ezlink3000 313
10 Appendix 315
10.1 FAQ 315
10.1.1 How to conduct auxiliary detection for smart meters/CT? 315
10.1.2 How to Upgrade the Device Version 315
10.2 Abbreviations 316
10.3 Explanation of Terms 319
10.4 Battery SN Code Meaning 320
10.5 Safety Standard Countries 321
11 Contact Details 328

1 Safety Precautions

The Safety Precautions information contained in this document must always be followed when operating the equipment.

⚠WARNING
The device has been strictly designed and tested in accordance with safety regulations. However, as electrical equipment, any operation must comply with relevant safety instructions. Improper handling may result in serious injury or property damage.

1.1 General Safety

NOTICE

- The content of this document may be updated periodically due to product version upgrades or other reasons. Unless otherwise agreed, the document content cannot replace the safety precautions on the product labels. All descriptions in the document are for guidance only.
- Please read this document carefully before installing the device to understand the product and the precautions.
- All operations on the device must be performed by professional and qualified electrical technicians who are familiar with the relevant standards and safety regulations at the project location.
- When operating the device, use insulated tools and wear personal protective equipment to ensure personal safety. When touching electronic components, wear anti-static gloves, anti-static wrist straps, anti-static clothing, etc., to protect the device from electrostatic damage.
- Unauthorized disassembly or modification may cause device damage, which is not covered under warranty.
- Device damage or personal injury caused by failure to install, use, or configure the device in accordance with the requirements of this document or the corresponding user manual is beyond the manufacturer's liability. For more product warranty information, please visit the official website: https://en.goodwe.com/warrantyrelated.html.

1.3 System Safety

⚠DANGER

- Before performing electrical connections, disconnect all upstream switches of the equipment to ensure the equipment is de-energized. Live operation is strictly prohibited, otherwise risks such as electric shock may occur.
- For equipment supporting PV string connection, the PV input terminals have weak surge current capability. It is strictly forbidden to power on the equipment directly from the PV ports using a DC voltage source. If it is necessary to power on from the PV ports, please follow the steps below. Damage caused by improper operation is considered人为损坏 and is not covered by the product warranty.
  1. First, limit the output current of the DC voltage source within the maximum input current range allowed by the PV ports.
  2. Then close the DC switch of the inverter.
  3. Finally, slowly increase the output voltage of the DC source from zero to the target value at a rate of ≤50V/s.
- To prevent personal injury or equipment damage caused by live operation, a circuit breaker must be added to the voltage input side of the equipment.
- All operations such as transportation, storage, installation, operation, use, and maintenance must comply with applicable laws, regulations, standards, and specifications.
- The specifications of cables and components used for electrical connections must comply with local laws, regulations, standards, and specifications.
- Please use the cable connectors provided in the box to connect the equipment cables. If other models of connectors are used, any resulting equipment damage is not within the responsibility of the equipment manufacturer.
- Ensure all equipment cables are connected correctly, securely, and without looseness. Improper wiring may cause poor contact or damage the equipment.
- The equipment's protective earth wire must be securely connected.
- To protect the equipment and its components from damage during transportation, ensure transport personnel are professionally trained. Record the operation steps during transportation and keep the equipment balanced to avoid dropping.
- The equipment is heavy. Please deploy personnel corresponding to the equipment weight to prevent the equipment from exceeding the weight limit for manual handling, which could cause injury.
- Ensure the equipment is placed stably and not tilted. Equipment tipping over may cause equipment damage and personal injury.

⚠WARNING

- Avoid letting the wiring terminals bear weight during equipment installation, otherwise the terminals may be damaged.
- If the cable is subjected to excessive pulling force, it may cause poor connection. When wiring, leave a certain length of cable slack before connecting it to the equipment's wiring port.
- Cables of the same type should be bundled together. Cables of different types should be routed separately with a minimum spacing of 30mm. Intertwining or交叉布放 is prohibited.
- Using cables in high-temperature environments may cause insulation aging or damage. Maintain a distance of at least 30mm between cables and发热器件 or the periphery of heat source areas.

1.3.1 PV String Safety

⚠WARNING

- Ensure the component frame and mounting system are properly grounded.
- After completing the DC cable connections, ensure the connections are tight and secure with no looseness. Improper wiring may lead to poor contact or high impedance, and damage the inverter.
- Use a multimeter to measure the positive and negative poles of the DC cables to ensure correct polarity and no reverse connection; and ensure the voltage is within the allowable range.
- Use a multimeter to measure the DC cables to ensure correct polarity and no reverse connection; the voltage should be lower than the maximum DC input voltage. Damage caused by reverse connection and overvoltage is not covered by the equipment manufacturer's warranty.
- The PV string output does not support grounding. Before connecting the PV string to the inverter, ensure the minimum insulation resistance to ground of the PV string meets the minimum insulation impedance requirement (R=Max. Input Voltage (V)/30mA).
- Do not connect the same PV string to multiple inverters, as this may cause inverter damage.
- The photovoltaic modules used with the inverter must comply with IEC 61730 Class A standards.
- When the input voltage or input current of the photovoltaic string is high, it may cause the inverter output power to derate.

1.3.2 Inverter Safety

⚠WARNING

- Ensure that the voltage and frequency of the grid connection point comply with the inverter's grid connection specifications.
- It is recommended to add protective devices such as circuit breakers or fuses on the AC side of the inverter. The specification of the protective device should be greater than 1.25 times the maximum AC output current of the inverter.
- If the inverter triggers an arc fault alarm less than 5 times within 24 hours, the alarm can be automatically cleared. After the 5th arc fault alarm, the inverter will shut down for protection. The inverter can resume normal operation only after the fault is cleared.
- If no battery is configured in the photovoltaic system, it is not recommended to use the BACK-UP function, as it may cause a risk of system power outage.
- Changes in grid voltage and frequency may cause the inverter output power to derate.

1.3.3 Battery Safety

⚠DANGER

- Before operating any equipment in the system, ensure the equipment is powered off to avoid the risk of electric shock. Strictly adhere to all safety precautions in this manual and the safety labels on the equipment during operation.
- Do not disassemble, modify, or repair the battery or control box without official authorization from the equipment manufacturer. Doing so may cause electric shock or equipment damage, and any resulting losses are beyond the manufacturer's liability.
- Do not strike, pull, drag, squeeze, or step on the equipment. Do not place the battery in fire, as there is a risk of explosion.
- Do not place the battery in a high-temperature environment. Ensure there are no heat sources nearby and that it is not exposed to direct sunlight. A fire may occur if the ambient temperature exceeds 60°C.
- Do not use the battery or control box if there are obvious defects, cracks, damage, or other issues. Battery damage may lead to electrolyte leakage.
- Do not move the battery system while it is operating. If battery replacement or addition is required, please contact the after-sales service center.
- A battery short circuit may cause personal injury. The instantaneous high current from a short circuit can release a large amount of energy, potentially causing a fire.
- The battery DC circuit breaker must comply with the requirements of the AS/NZS 5139 standard.

⚠WARNING

- Battery current may be affected by factors such as temperature, Humidity, weather conditions, etc., which may lead to current limiting and impact load capacity.
- If the battery fails to start, please contact the after-sales service center as soon as possible. Otherwise, the battery may be permanently damaged.
- Please perform regular inspection and maintenance on the battery according to its maintenance requirements.

Emergency Response Measures

- Battery electrolyte leakage
  If electrolyte leaks from the battery module, avoid contact with the leaked liquid or gas. Electrolyte is corrosive and contact may cause skin irritation and chemical burns. If accidental contact with the leaked substance occurs, take the following actions:
  - inhalation: Evacuate from the contaminated area and seek medical help immediately.
  - Eye contact: Flush with clean water for at least 15 minutes and seek medical help immediately.
  - Skin contact: Wash the affected area thoroughly with soap and water and seek medical help immediately.
  - Ingestion: Induce vomiting and seek medical assistance immediately.
- Fire
  - When the battery temperature exceeds 150°C, there is a risk of fire. A battery fire may release toxic and harmful gases.
  - To prevent fire, ensure that carbon dioxide, Novec1230, or FM-200 fire extinguishers are available near the equipment.
  - When extinguishing a fire, do not use ABC dry powder fire extinguishers. Firefighters must wear protective clothing and self-contained breathing apparatus.
- Battery triggers fire protection
  For batteries equipped with an optional fire protection function, after the fire protection function is triggered, perform the following actions:
  - Immediately cut off the main power switch to ensure no current flows through the battery system.
  - Conduct a preliminary visual inspection of the battery for any damage, deformation, leakage, or unusual odor. Check the battery casing, connectors, and cables.
  - Use a temperature sensor to detect the temperature of the battery and its surroundings to ensure there is no risk of overheating.
  - Isolate and label the damaged battery, and dispose of it properly according to local regulations.

1.3.4 Smart Meter Safety

⚠WARNING

If the grid voltage fluctuation exceeds 265V, long-term overvoltage operation may damage the meter. It is recommended to add a fuse with a rated current of 0.5A on the voltage input side of the meter to protect it.

1.4 Safety Symbols and Certification Marks

⚠DANGER

- After the equipment is installed, the labels and warning signs on the enclosure must be clearly visible. Covering, altering, or damaging them is prohibited.
- The following enclosure warning label descriptions are for reference only. Please refer to the actual labels used on the equipment.

No.	Symbol	Meaning
1		Potential hazard exists during equipment operation. Take protective measures when operating the equipment.
2		High voltage hazard. High voltage is present during equipment operation. Ensure the equipment is powered off before performing any operations.
3		The inverter surface is at high temperature. Do not touch during operation to avoid burns.
4		Use the equipment properly. There is a risk of explosion under extreme conditions.
5		The battery contains flammable materials. Beware of fire.
6		The equipment contains corrosive electrolyte. Avoid contact with leaked electrolyte or vapor.
7		Delayed discharge. After powering off the equipment, wait for 5 minutes until it is completely discharged.
8		Keep the equipment away from open flames or ignition sources.

No.	Symbol	Meaning
9		Keep the equipment out of reach of children.
10		Use the equipment properly. There is a risk of explosion under extreme conditions.
11		The battery contains flammable materials. Beware of fire.
12		Do not lift the equipment after the battery system wiring is completed or while the battery system is operating.
13		Do not extinguish with water.
14		Read the product manual carefully before operating the equipment.
15		Wear personal protective equipment during installation, operation, and maintenance.
16		Do not dispose of the equipment as household waste. Dispose of the equipment according to local laws and regulations, or return it to the manufacturer.
17		Do not directly disconnect or plug/unplug the DC terminals while the equipment is operating.
18		Grounding point.
19		Recycling symbol.
20		CE certification mark.
21		TUV mark.
22		RCM mark.

1.5 EU Declaration of Conformity

1.5.1 Equipment with Wireless Communication Modules

Equipment with wireless communication modules sold in the European market must comply with the following directives:

- Radio Equipment Directive 2014/53/EU (RED)
- Restrictions of Hazardous Substances Directive 2011/65/EU and (EU) 2015/863 (RoHS)
- Waste Electrical and Electronic Equipment 2012/19/EU
- Registration, Evaluation, Authorization and Restriction of Chemicals (EC) No 1907/2006 (REACH)

1.5.2 Equipment without Wireless Communication Modules (Except Battery)

Equipment without wireless communication functions that can be sold in the European market must meet the requirements of the following directives:

- Electromagnetic compatibility Directive 2014/30/EU (EMC)
- Electrical Apparatus Low Voltage Directive 2014/35/EU (LVD)
- Restrictions of Hazardous Substances Directive 2011/65/EU and (EU) 2015/863 (RoHS)
- Waste Electrical and Electronic Equipment 2012/19/EU
- Registration, Evaluation, Authorization and Restriction of Chemicals (EC) No 1907/2006 (REACH)

1.5.3 Battery

Batteries that can be sold in the European market meet the requirements of the following directives:

- Electromagnetic compatibility Directive 2014/30/EU (EMC)
- Electrical Apparatus Low Voltage Directive 2014/35/EU (LVD)
- Restrictions of Hazardous Substances Directive 2011/65/EU and (EU) 2015/863 (RoHS)[*1]
- Regulation (EU) 2023/1542 Article 12 - Safety of stationary battery energy storage systems
- Regulation (EU) 2023/1542 Article 10 - Performance and durability requirements

for rechargeable industrial batteries, LMT batteries and electric vehicle batteries

- Regulation (EU) 2023/1542 Article 14 - Information on the state of health and expected lifetime of batteries
- Waste Electrical and Electronic Equipment 2012/19/EU
- Registration, Evaluation, Authorization and Restriction of Chemicals (EC) No 1907/2006 (REACH)
  *1: Our company's battery products meet the hazardous substance limit requirements stipulated by this regulation.

More EU Declarations of Conformity can be obtained from the official website.

2 System Introduction

2.1 System Overview

Commercial & Industrial Smart Inverter Solution integrates devices such as inverters, batteries, Smart Meters, and smart communication sticks. In a photovoltaic system, it converts solar energy into electricity to meet the power demands of commercial and industrial applications. The energy IoT devices in the system manage the electrical loads by identifying the overall power situation within the system, thereby achieving intelligent management of power for use by loads, storage in the battery, or export to the grid.

⚠WARNING

- Select the battery model according to the inverter and battery compatibility list. For requirements regarding batteries used in the same system, such as whether models can be mixed or capacities must be consistent, please refer to the user manual of the corresponding battery model or contact the battery manufacturer for relevant requirements. Inverter and battery compatibility list: https://en.goodwe.com/Ftp/EN/Downloads/User%20Manual/GW_Battery%20Compatibility%20Overview-EN.pdf.
- Due to product version upgrades or other reasons, the document content will be updated periodically. For the compatibility relationship between inverters and IoT products, please refer to: https://en.goodwe.com/Ftp/EN/Downloads/User%20Manual/GW_Compatibility-list-of-GoodWe-inverters-and-IoT-products-EN.pdf.
- The PV system is not suitable for connecting devices that rely on stable power supply, such as life-sustaining medical equipment, etc. Please ensure that system power failure will not cause personal injury.
- The BACK-UP function is not recommended for PV systems without a battery configured, as it may cause a system power failure risk.
- The BACK-UP port does not support connecting auto-transformers or isolation transformers.
- The battery current may be affected by factors such as temperature, Humidity, weather conditions, etc., which may lead to battery current limiting and affect

⚠WARNING

load capacity.

- The inverter has a UPS function with a switching time of <10ms. Please ensure the BACK-UP Loads capacity is < the inverter's rated power. Otherwise, the UPS function may fail during a grid power outage.
- The BACK-UP function is not recommended for PV systems without a battery configured, as it may cause a system power failure risk.
- For detailed networking and wiring schemes for each scenario, please refer to: Detailed System Wiring Diagram.
- When the inverter is in an off-grid state, it can be used normally for common household loads. However, the following loads need to be limited, such as:
  - inductive load: inductive load power < 0.4 times the inverter's rated output power.
  - Capacitive load: total power ≤ 0.66 x inverter rated output power.
  - The inverter does not support half-wave loads. Half-wave loads: Some old or non-EMC compliant appliances (such as hair dryers, small heaters using half-wave rectification) may not work properly.
- In a system where the inverter operates completely off-grid, if the battery is in low light or rainy weather for a long time and cannot be replenished in time, it may lead to over-discharge, causing battery performance degradation or damage. To ensure long-term stable system operation, avoid completely draining the battery. Recommended measures are as follows:
  - During off-grid operation, set the minimum SOC protection threshold. It is recommended to set the off-grid battery SOC lower limit to 30%.
  - When the SOC approaches the protection threshold, the system will automatically enter load limiting or protection mode.
  - If there are multiple consecutive days of insufficient sunlight and the battery SOC is too low, promptly replenish the battery using external energy sources (such as a generator or grid-assisted charging).
  - Regularly check the battery status to ensure it is within a safe operating range.
  - It is recommended to fully charge and discharge the battery every six months to calibrate the SOC accuracy.

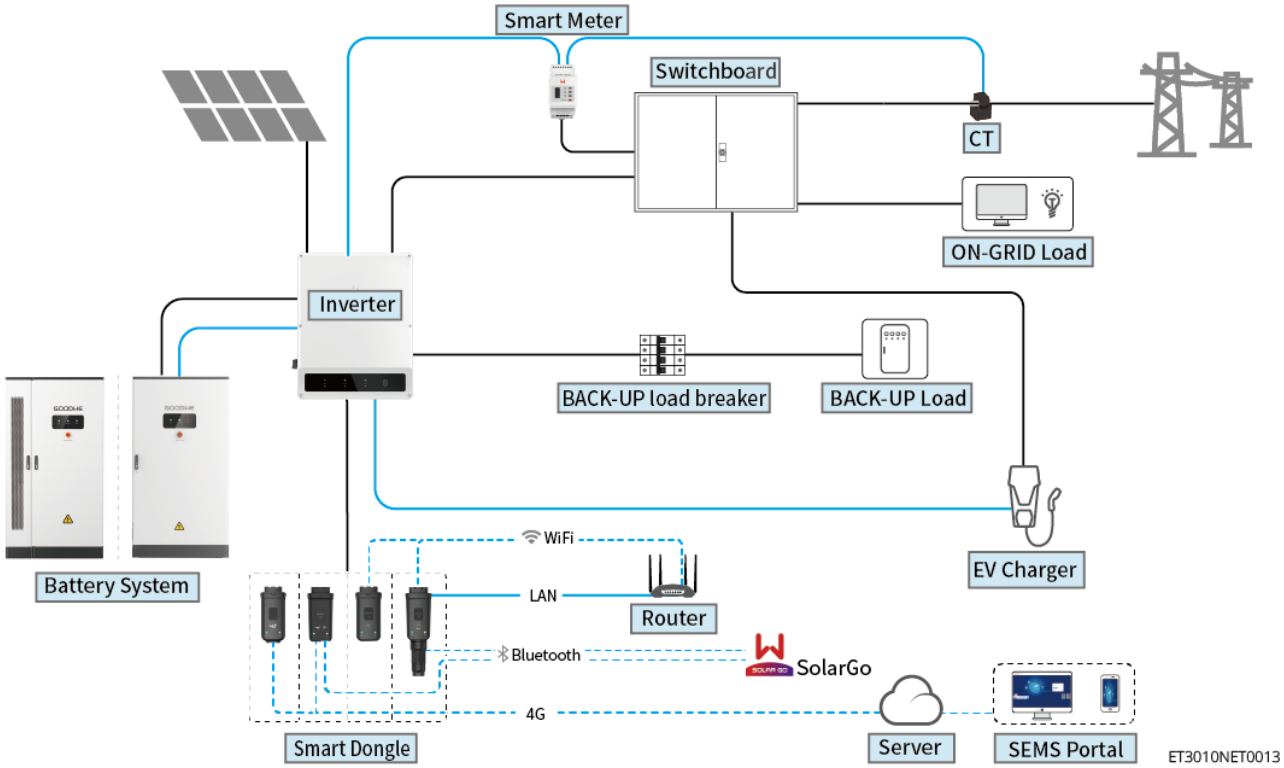
Smart Meter
Switchboard
CT
ON-GRID Load
Inverter
BACK-UP load breaker
BACK-UP Load
Battery System
EV Charger
WiFi
LAN
Router
Bluetooth
SolarGo
4G
Smart Dongle
Server
SEMS Portal
ET3010NET0013

Device Type	model	Description
Inverter	GW12KL-ET GW18KL-ET GW15K-ET GW20K-ET GW25K-ET GW29.9K-ET GW30K-ET	• Supports up to 4 inverters to form a parallel system. • Battery-ready models do not support forming a parallel system when the battery function is not activated. • Only machines with the same AC output voltage can form a parallel system. • GW12KL-ET and GW18KL-ET only support BAT-S Series 15.3kWh-56.3kWh batteries. And the following version requirements must be met: ◦ Inverter ARM software version 17.449 or above. ◦ Inverter DSP software version 13.13011 or above. • In a coupling scenario, using a dual meter can simultaneously monitor grid-tied inverter power generation and load power consumption. The following version requirements must be met: ◦ Inverter ARM software version 15.441 or above. ◦ Inverter DSP software version 11.11060 or above. ◦ SolarGo version 6.9.0 or above.
Battery system	GW60KWH-D-10 GW60KWH-D-10 (without expansion cabinet)	The system supports up to 3 clusters of battery systems in parallel.

Device Type	model	Description
	GW15.3-BAT-I-G10 GW20.4-BAT-I-G10 GW25.6-BAT-I-G10 GW30.7-BAT-I-G10 GW35.8-BAT-I-G10 GW40.9-BAT-I-G10 GW46.0-BAT-I-G10 GW51.2-BAT-I-G10 GW56.3-BAT-I-G10	• Supports up to 6 clusters of battery systems in parallel. • Battery systems of different models cannot be mixed and used in parallel. • Due to battery operating voltage range limitations, GW15.3-BAT-I-G10 and GW20.4-BAT-I-G10 do not support GW15K-ET, GW20K-ET, GW25K-ET, and GW30K-ET.
	GW61.4-BAT-AC-G10 GW92.1-BAT-AC-G10 GW102.4-BAT-AC-G10 GW112.6-BAT-AC-G10	Only supports a single cluster.
Smart Meter	• GM3000 • GM330 • GMK330	• GM3000: Included with the inverter, CT cannot be replaced, CT ratio: 120A: 40mA • GM330: CT can be purchased from GoodWe or independently, CT ratio requirement: nA: 5A ◦ nA: CT primary side input current, n ranges from 200 to 5000 ◦ 5A: CT secondary side output current • GMK330: CT shipped with the meter, CT ratio: ◦ 120A: 40mA ◦ 200A: 50mA (only Brazil)

Device Type	model	Description
smart dongle	• WiFi/LAN Kit-20 • Wi-Fi Kit • LS4G Kit-CN、4G Kit-CN、4G Kit-CN-G20 or 4G Kit-CN-G21 (only China) • Ezlink3000	• For single unit, please use WiFi/LAN Kit-20, Wi-Fi Kit, LS4G Kit-CN, 4G Kit-CN, 4G Kit-CN-G20, or 4G Kit-CN-G21 modules. If using WiFi/LAN Kit-20 to replace Wi-Fi Kit, please upgrade the inverter ARM firmware version to 08.401 or above before switching to WiFi/LAN Kit-20. • In parallel system, only the master inverter needs to be connected to Ezlink3000, slave inverters do not need communication modules. Ezlink3000 firmware version must be 04 or above.

2.2.1 Inverter

The Inverter in photovoltaic systems controls and optimizes energy flow through an integrated energy management system. It can supply the electricity generated in the photovoltaic system for load use, store it in batteries, or output it to the grid.

NOTICE
The appearance of inverters may vary across different power ranges. Please refer to the actual product.

No.	model	Nominal output power	Nominal output voltage	Battery Port Quantity
1	GW12KL-ET	12kW	220V, 3L/N/PE	1
2	GW18KL-ET	18kW		2
3	GW15K-ET	15kW	380/400V，3L/N/PE	1
4	GW20K-ET	20kW		1

No.	model	Nominal output power	Nominal output voltage	Battery Port Quantity
5	GW25K-ET	25kW		2
6	GW29.9K-ET	29.9kW		2
7	GW30K-ET	30kW		2

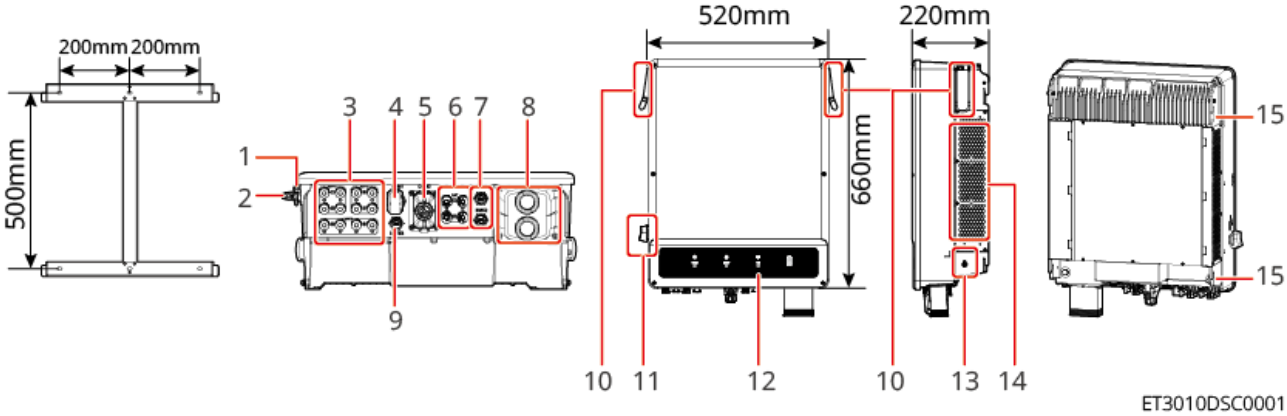

Component Introduction

No.	Component/Silkscreen	Description
1	DC Switch Lock Hole	Australia only.
2	DC Switch	Controls the connection or disconnection of the DC input.
3	PV Input Terminals	Connect the DC input cables from the PV modules. • GW15K-ET, GW20K-ET, GW12KL-ET x 2 • GW25K-ET, GW29.9K-ET, GW30K-ET, GW18KL-ET x 3
4	Communication Module Port	Connect the communication module, supporting 4G and Wi-Fi/LAN modules.
5	Communication Port	Connect the communication cable, supporting communication with DRED, Remote Shutdown, Rapid Shutdown, RCR, EMS, and generator.

6	Battery Connection Port	Connect the battery DC cables. • GW15K-ET, GW20K-ET, GW12KL-ET x 1 • GW25K-ET, GW29.9K-ET, GW30K-ET, GW18KL-ET x 2
7	BMS Communication Port	Connect the battery communication cable. • GW15K-ET, GW20K-ET, GW12KL-ET x 1 • GW25K-ET, GW29.9K-ET, GW30K-ET, GW18KL-ET x 2
8	AC Port	Connect the AC cables, including the ON-GRID and BACK-UP ports.
9	METER Communication Port	Connect the smart meter.
10	Handle	For moving the inverter.
11	Indicator	Indicates the operating status of the inverter.
12	Grounding Terminal	Connect the protective ground wire for the enclosure.
13	Fan	For inverter cooling.
14	Inverter Mounting Slot	For mounting and securing the inverter.

Australian Junction Box Dimensions

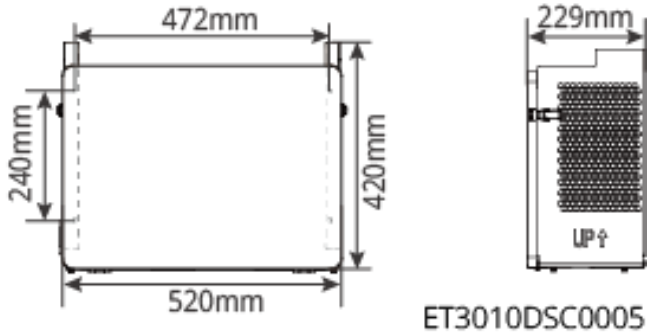

2.2.2 Battery

The battery system consists of a PCU and a PACK.
The battery system can store and release electrical energy according to the requirements of the photovoltaic energy storage system. The input and output ports of this energy storage system are both high-voltage direct current.

NOTICE

- A single battery cabinet does not support expansion by adding PACKs after installation.
- BAT series battery systems can expand the cluster within one year after installation by adding battery cabinets of the same model and part number. For details, please consult the after-sales service.

2.2.2.1 Lynx C Series 60kWh Commercial & Industrial Battery System

No.	model	Rated Capacity (kWh)	Includes AC Cabinet
1	GW60KWH-D-10	60	Yes
2	GW60KWH-D-10(without expansion cabinet)	60	No

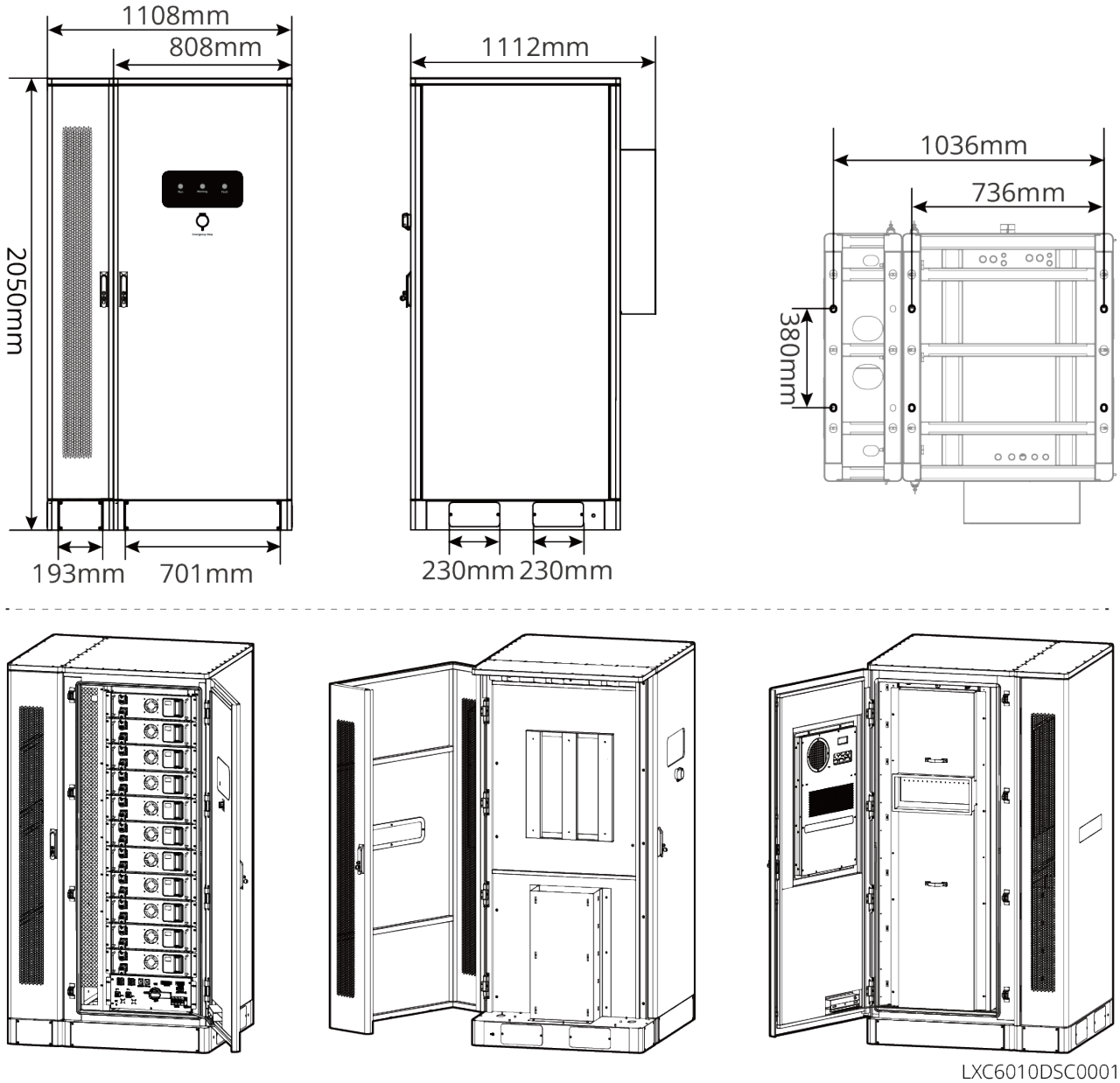

2.2.2.2 BAT-S Series 15.3-56.3kWh High Voltage Battery

No.	model	PACK Quantity	Rated Capacity (kWh)
1	GW15.3-BAT-I-G10	3	15.3
2	GW20.4-BAT-I-G10	4	20.4
3	GW25.6-BAT-I-G10	5	25.6
4	GW30.7-BAT-I-G10	6	30.7

No.	model	PACK Quantity	Rated Capacity (kWh)
5	GW35.8-BAT-I-G10	7	35.8
6	GW40.9-BAT-I-G10	8	40.9
7	GW46.0-BAT-I-G10	9	46.0
8	GW51.2-BAT-I-G10	10	51.2
9	GW56.3-BAT-I-G10	11	56.3

Dimension Description

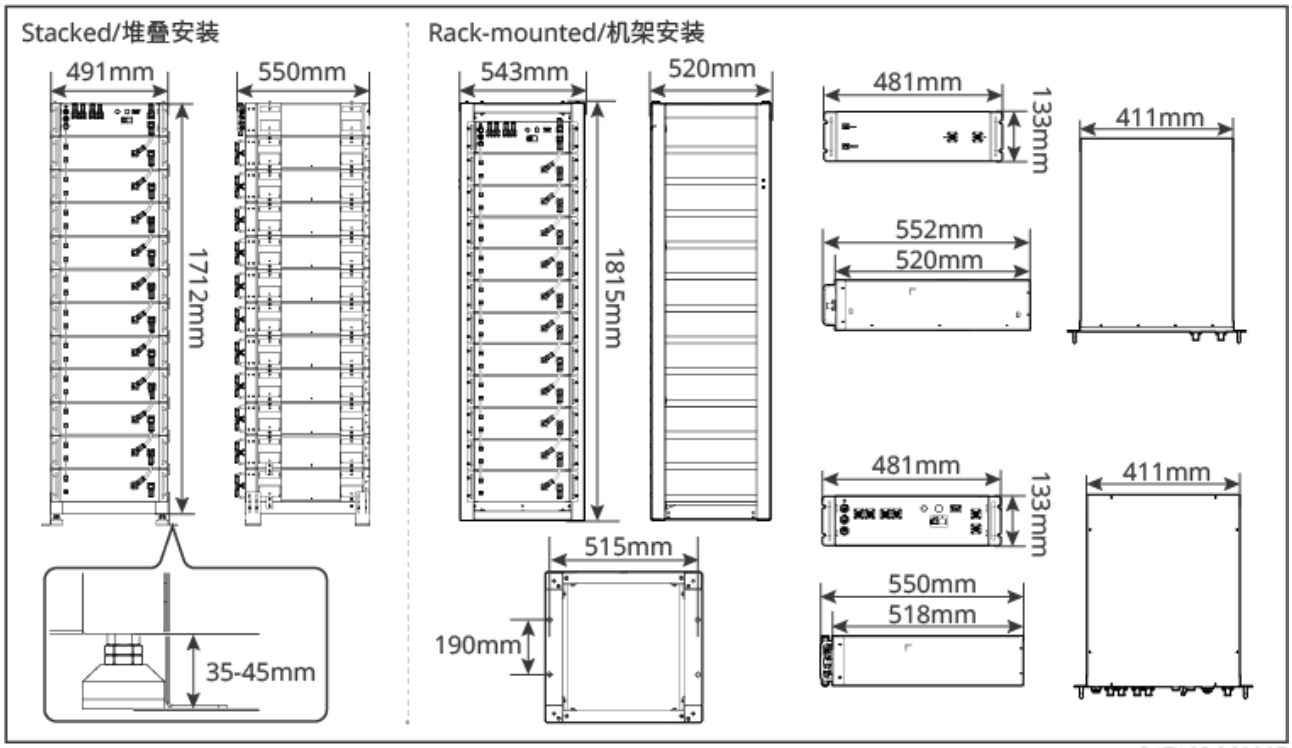

BAT10DSC0007

Component Introduction

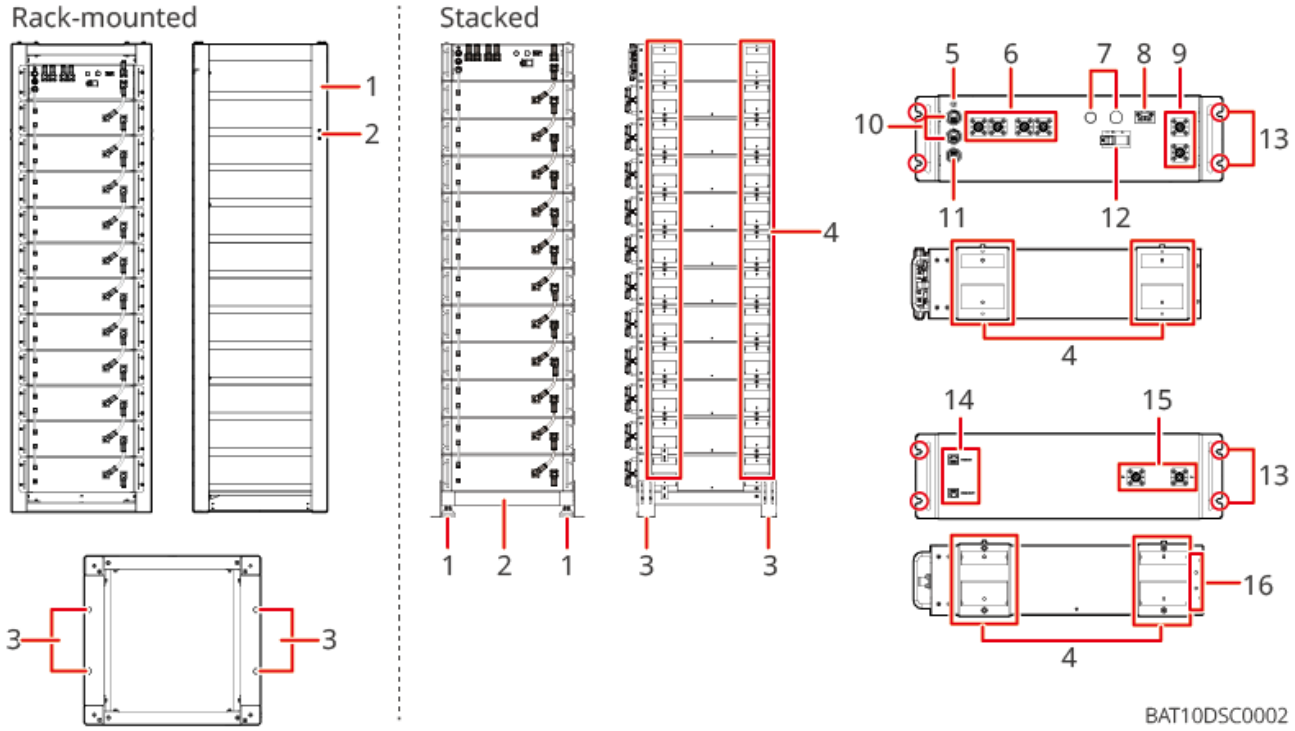

No.		Name	Description
Stack Installation	1	Adjustable Feet	Adjustable height to keep the base level
	2	Base	The battery system is stacked and placed on the base
	3	Floor Locking Bracket	Used to secure the base to the floor to prevent tipping
	4	Stacking Bracket	Fixed on the battery PACK for stack installation of batteries
Rack Mounting	1	Battery Rack	Used for installing the battery system
	2	Wall Locking Bracket Mounting Hole	Used to secure the battery rack to the wall to prevent tipping
	3	Floor Locking Bracket Mounting Hole	Used to secure the battery rack to the floor to prevent tipping

No.	Name	Description
5	Protective Grounding Point	Used for connecting the ground wire
6	High-Voltage Box Power Input/Output Port 1	Connects the power cable between the high-voltage box and the inverter
7	Battery Indicators	Used to indicate the battery system status
8	Dry Contact	Contact for external fire protection system activation (Normally, the dry contact remains open. When a closed dry contact is detected, the battery system will automatically power down)
9	High-Voltage Box Power Input/Output Port 2	Connects the power cable between the high-voltage box and the battery module
10	External Communication Port	Communicates with the inverter / Places termination resistor / Battery system cluster communication
11	High-Voltage Box Communication Port	Communicates with the battery module
12	Battery System Switch	Controls the start and stop of the battery system
13	High-Voltage Box / Battery PACK Mounting Hole	Used to secure the high-voltage box / battery PACK to the battery rack
14	Battery Module Communication Port	Used for communication between adjacent battery PACKs, and communication between battery PACK and high-voltage box

No.	Name	Description
15	Battery Module Power Input/Output Port	Connects the power cable between adjacent battery PACKs
16	Wall Locking Bracket Mounting Hole	Used for installing the wall locking bracket. Only the first and last battery PACKs require installation of the wall locking bracket.

2.2.2.3 BAT Series 61.4-112.6kWh Commercial & Industrial Battery System

No.	model	PACK Quantity	Rated Capacity (kWh)
1	GW61.4-BAT-AC-G10	6	61.4
2	GW92.1-BAT-AC-G10	9	92.1
3	GW102.4-BAT-AC-G10	10	102.4
4	GW112.6-BAT-AC-G10	11	112.6

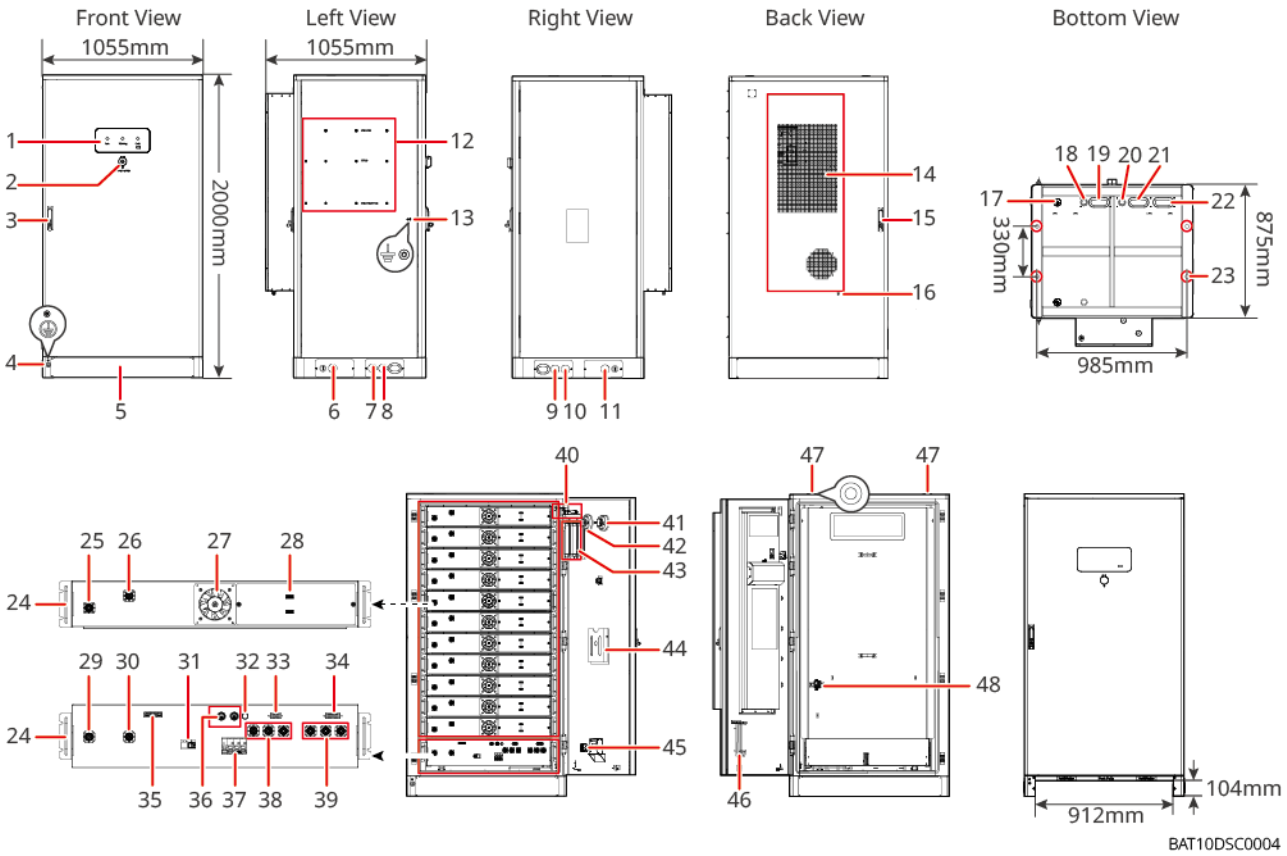

No.	Name	Description
1	LED Indicator Light	-
2	Emergency Stop Button	Pressing the emergency stop button will power down the battery system.
3	Front Door Lock	-
4	PE Port 1	Connects to the battery grounding cable.
5	Bottom Baffle	-
6	Left Side Cable Entry Hole 1	Air conditioner power cable & ET100 power cable.
7	Left Side Cable Entry Hole 2	Inverter communication cable.
8	Left Side Cable Entry Hole 3	Inverter power cable.

No.	Name	Description
9	Right Side Cable Entry Hole 1	Battery cluster parallel power cable.
10	Right Side Cable Entry Hole 2	Battery cluster parallel communication cable.
11	Right Side Cable Entry Hole 3	Air conditioner power cable.
12	Back Mounting Plate Installation Hole	Installation hole position for the inverter back mounting plate.
13	PE Port 2	Connects to the inverter grounding cable.
14	Air Conditioner	Responsible for temperature control; the air conditioner refrigerant model is R134A.
15	Rear Door Lock	-
16	Air Conditioner Drain Pipe Installation Port	-
17	Explosion-proof Valve	Responsible for explosion-proof, exhaust, and other functions. When abnormal pressure increase occurs inside the battery system, by opening the explosion-proof one-way valve exhaust port, internal gas is quickly and directionally released to prevent the battery system from exploding.
18	Communication Cable Inlet/Outlet (Bottom)	Inlet/outlet for communication cables between the battery and inverter.
19	Power Cable Inlet/Outlet (Bottom)	Inlet/outlet for power cables between the battery and inverter.
20	Battery Communication Cable Inlet/Outlet	Inlet/outlet for battery cluster parallel communication cables.

No.	Name	Description
21	Battery Power Cable Inlet/Outlet (Positive)	Inlet/outlet for battery cluster parallel power cables (positive).
22	Battery Power Cable Inlet/Outlet (Negative)	Inlet/outlet for battery cluster parallel power cables (negative).
23	Foundation Fixing Hole	Used to fasten the battery system to the foundation.
24	Handle	-
25	Battery PACK Power Input/Output Port Positive	-
26	Battery PACK Power Input/Output Port Negative	-
27	Fan	-
28	Battery PACK Communication Port	Communication between adjacent battery PACKs, communication with the high-voltage box, and fan power supply.
29	High-voltage Box Power Input/Output Port Negative 1	Connects the power cables between the high-voltage box and battery PACK.
30	High-voltage Box Power Input/Output Port Positive 1	
31	Molded Case Circuit Breaker	Controls the high-voltage output of the battery system.
32	Black Start Button	Controls the black start of the battery system.
33	Internal Communication Port 1	Communication with battery PACK and battery PACK fan power supply port 1.

No.	Name	Description
34	Internal Communication Port 2	Air conditioner communication, access control identification, emergency stop, and fire alarm signal communication port.
35	LAN Communication Port	LAN communication between batteries, used for transmitting cell-level information (Only supported on machines shipped after October 2025).
36	External Communication Port 1	Communication with inverter / placement of terminal resistor / battery system cluster parallel communication.
37	Air Switch	Controls the low-voltage power supply of the battery system.
38	High-voltage Box Power Input/Output Port Positive 2	Connects the power cables between the high-voltage box and inverter.
39	High-voltage Box Power Input/Output Port Negative 2	Connects the power cables between the high-voltage box and inverter.
40	Access Control Switch	Automatically disconnects when the door is opened to ensure the energy storage system is powered off.

No.	Name	Description
41	Temperature Detector	The temperature detector monitors temperature through a dual thermistor network and outputs a voltage proportional to the external temperature. One thermistor is exposed to ensure good thermal contact with the surrounding air, while the other thermistor is thermally insulated; when an anomaly is detected, it emits red light to alert the operator. • Suitable for environments with dust or smoke under normal conditions. • Wide operating voltage range.
42	Smoke Detector	The smoke detector uses the principle of scattered light to detect smoke entering the detector's inner cavity. • Good response to slow-burning, smoldering fires. • Unaffected by wind or atmospheric pressure. • Some models are equipped with a flashing LED and magnetic test switch. • Alarm indicator: Red light-emitting diode (LED) emits red light.

No.	Name	Description
43	Aerosol Fire Extinguishing Device	Monitors fire signals inside the cabinet and implements fire extinguishing. When a fire occurs, the aerosol fire extinguishing device ignites the thermal fuse upon receiving an electrical start signal or open flame. The electric igniter thermal fuse burns and activates the aerosol generator in the fire extinguishing device. The aerosol generator releases heat through a series of reactions to decompose the chemical coolant, allowing the aerosol generator and coolant to combine for fire extinguishing.
44	Document Shelf	-
45	Fire Action Signal Port	Dry contact signal interface, normally NC (normally closed state). Voltage: 0-24Vdc, Current: 0.3A. Connects to the audible and visual alarm cable.
46	Maintenance Hook Shelf	When disassembling the Pack and PCU, the maintenance hook can be taken from here for operation.
47	Lifting Ring Installation Hole	-
48	Air Conditioner Switch	Connects to the air conditioner power cable and controls the air conditioner power supply.

Fire Protection System Description

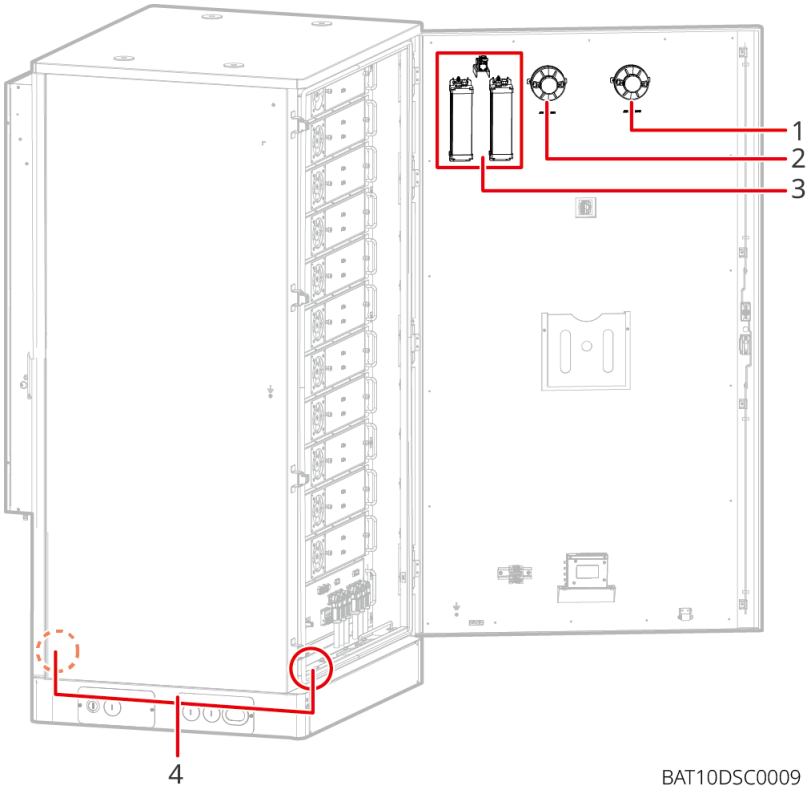

1	2	3	4
Smoke Detector	Heat Detector	Aerosol Fire Extinguishing Device	Explosion-Proof Valve

- **Temperature Detector & Smoke Detector**

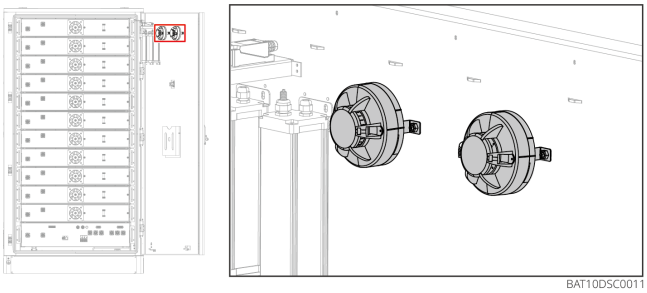

Temperature Detection Principle: The detector uses a negative temperature coefficient thermistor as the sensor, leveraging its sensitivity to ambient temperature to obtain environmental temperature information. The internal circuit converts this information into a voltage signal and transmits it to the microcontroller. The microcontroller analyzes and processes the signal using built-in intelligent algorithms to determine whether a fire alarm or fault condition is present.
Smoke Detection Principle: The detector utilizes infrared light scattering principle

to detect fires. In a smoke-free state, it receives only very weak infrared light. When smoke enters the optical smoke detection chamber, the scattered light enhances the received light signal. When the smoke concentration reaches a certain level, an alarm signal is output.

Technical Specifications	Temperature Detector	Smoke Detector
Dimensions (mm)	102 × 55	
Installation Requirements	Screw Fixation	
indicator (Red)	Flashes during monitoring, stays on when alarming	
Operating Temperature (℃)	-40~+85	
Relative Humidity	≤95%RH (Non-condensing)	

- **Explosion-Proof Valve**

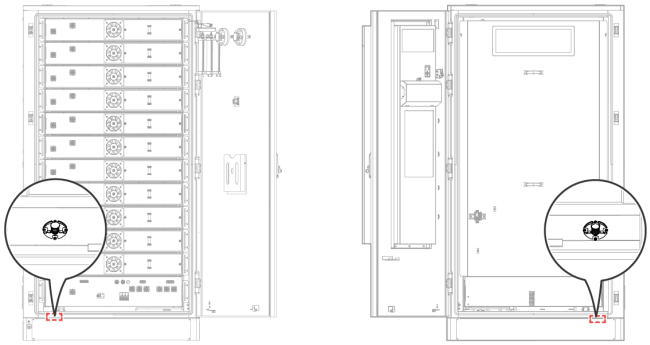

BAT10DSC0012

When the internal pressure of sealed products like battery enclosures rises rapidly, the explosion-proof check valve's exhaust port opens to quickly and directionally release the internal gas, thereby preventing explosions in sealed products such as battery boxes.

Technical Specifications	Explosion Vent Valve
Ingress Protection Rating	IP68
Opening Area	570 mm^2
Operating Temperature	-40℃ ~ +130℃
Flame Retardancy	UL94-V0

- **Aerosol Fire Extinguishing Device**

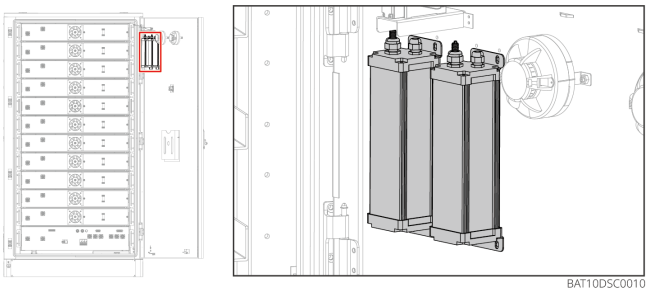

When a fire occurs, upon receiving an electrical activation signal or when an open flame ignites the thermal fuse, the electric initiator or burning thermal fuse activates the aerosol-forming agent inside the fire extinguishing device. The heat released by the redox reaction of the aerosol-forming agent causes the chemical coolant to decompose, enabling both the aerosol-forming agent and the coolant to participate in fire suppression.

Technical Specifications	Aerosol Fire Extinguishing Device
Operating Ambient Temperature Range	-30℃ ~ +70℃
Operating Ambient Relative Humidity	≤95%RH
Thermal Activation Temperature	185±10℃

Fire Protection Logic

The fire protection for this battery system employs a graded response design. When a fire occurs inside a battery Pack, it is first detected by the Pack-level detector, which immediately activates the Pack's internal aerosol fire extinguishing device for initial suppression. If the fire is not controlled and spreads further, cabinet-level fire protection is triggered. When both the smoke detector and temperature detector detect a fire, or when an open flame ignites the thermal fuse (at a temperature of 180°C), the cabinet-level aerosol fire extinguishing device is automatically activated for comprehensive fire suppression. The aerosol-forming agent produces extinguishing agents through a combustion reaction, and the heat released during the reaction decomposes the chemical coolant. The aerosol fire extinguishing agent and coolant work synergistically to extinguish the fire. Simultaneously, the BMS receives feedback signals from the fire protection system, triggering external audible and visual alarms until the fire is completely extinguished.

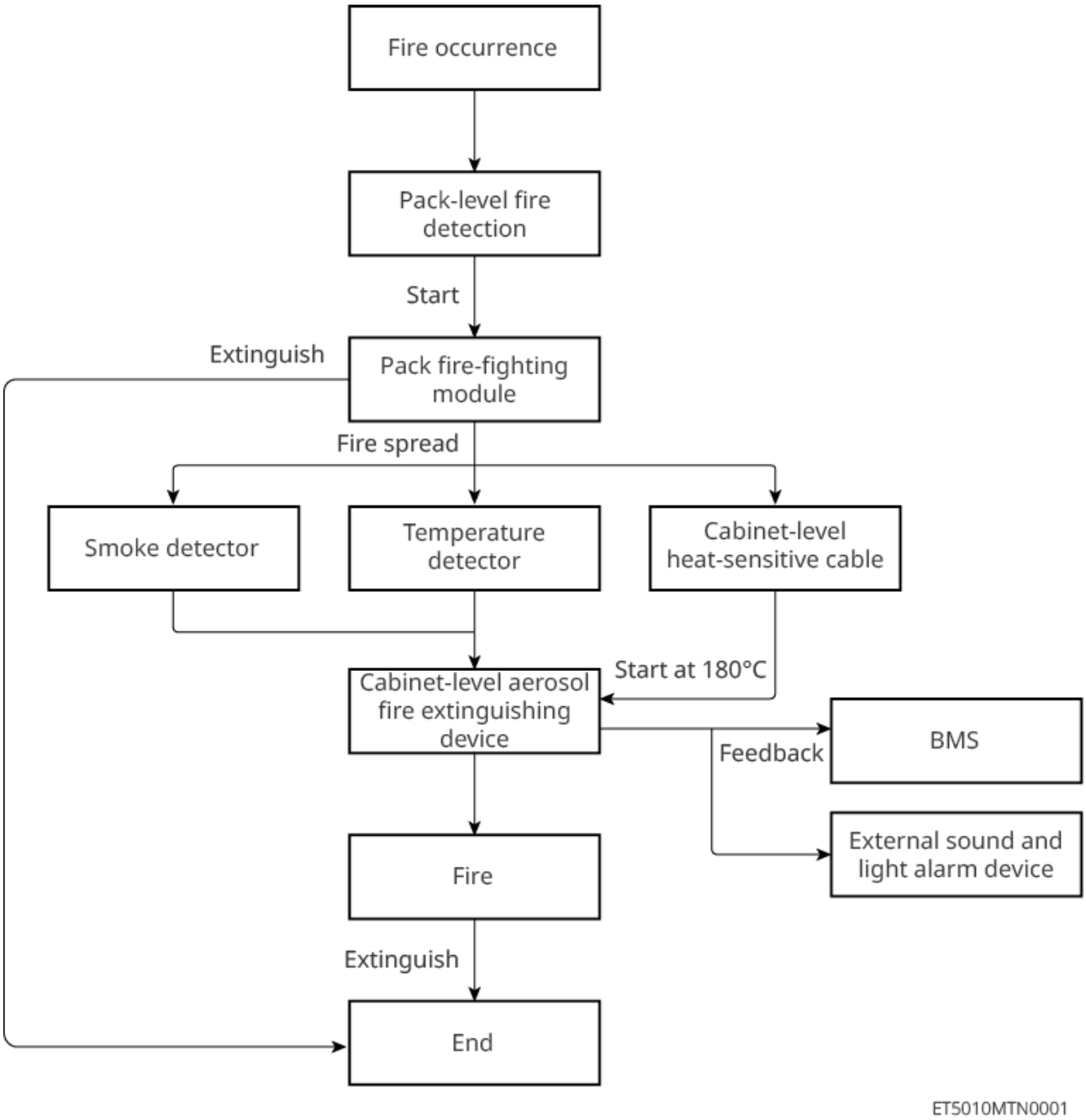

2.2.3 Smart Meter

The Smart Meter can measure parameters such as grid voltage, current, power, frequency, and electrical energy, and transmit this information to the inverter to control the input and output power of the energy storage system.

GM3000&CT

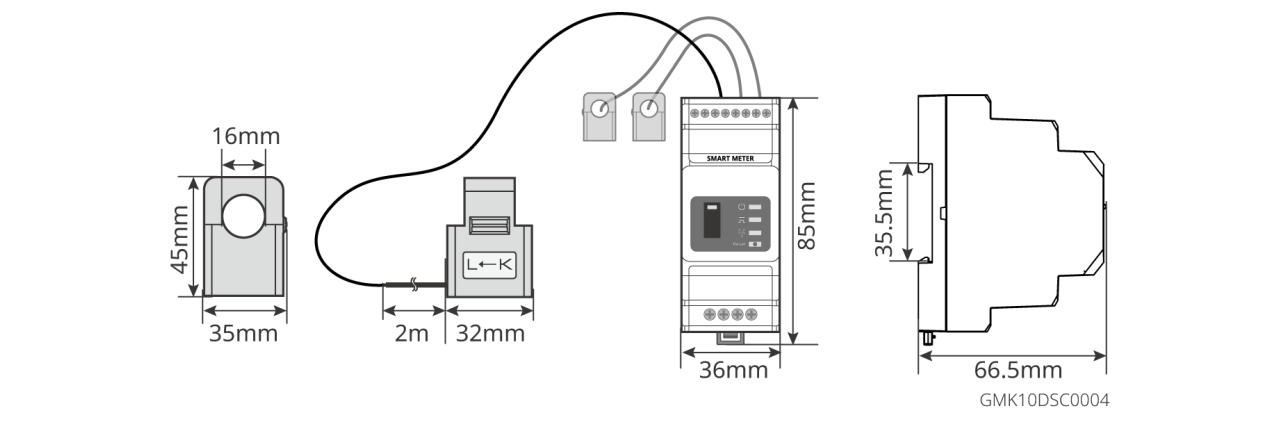

GM330&GMK330&CT

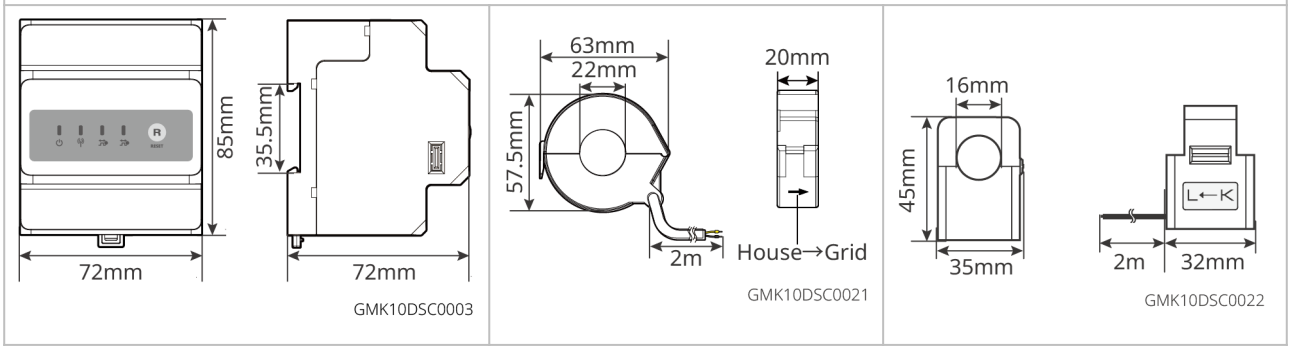

No.	model	Applicable Scenarios
1	GM3000	CT replacement not supported, CT ratio: 120A: 40mA
2	GM330	CT can be purchased from GoodWe or self-sourced, CT ratio requirement: nA: 5A • nA: CT primary side input current, the range of n is 200-5000 • 5A: CT secondary side output current
3	GMK330	CT shipped with the meter, CT ratio: • 120A: 40mA • 200A: 50mA (Brazil only)

2.2.4 smart dongle

The smart dongle is primarily used for real-time transmission of various inverter

power generation data to the SEMS Portal remote monitoring platform, and for connecting to the smart dongle via the SolarGo APP for local device commissioning and debugging.

Wi-Fi Kit 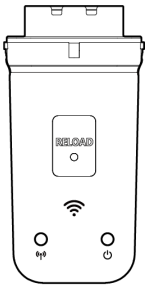 Smart dongle 0011	WiFi/LAN Kit-20 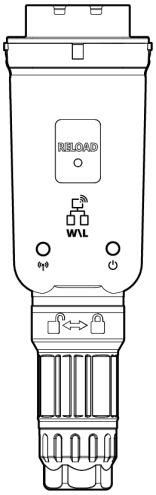 Smart dongle 0006	4G Kit-CN LS4G Kit-CN 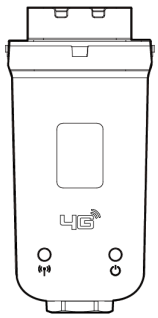 Smart dongle 0003	4G Kit-CN-G20 4G Kit-CN-G21 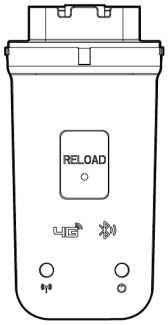 Smart dongle 0004	Ezlink3000 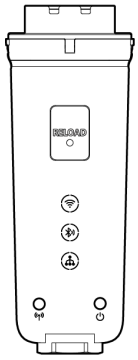 Smart dongle 0008

No.	model	Signal Type	Applicable Scenario
1	Wi-Fi Kit	WiFi	Single inverter scenario
2	WiFi/LAN Kit-20	WiFi, LAN, Bluetooth	
3	LS4G Kit-CN 4G Kit-CN	4G	
4	4G Kit-CN-G20	4G, Bluetooth	
	4G Kit-CN-G21	4G, Bluetooth, CNSS	
5	Ezlink3000	WiFi, LAN, Bluetooth	Master unit in multi-inverter scenario

2.3 Supported Grid Types

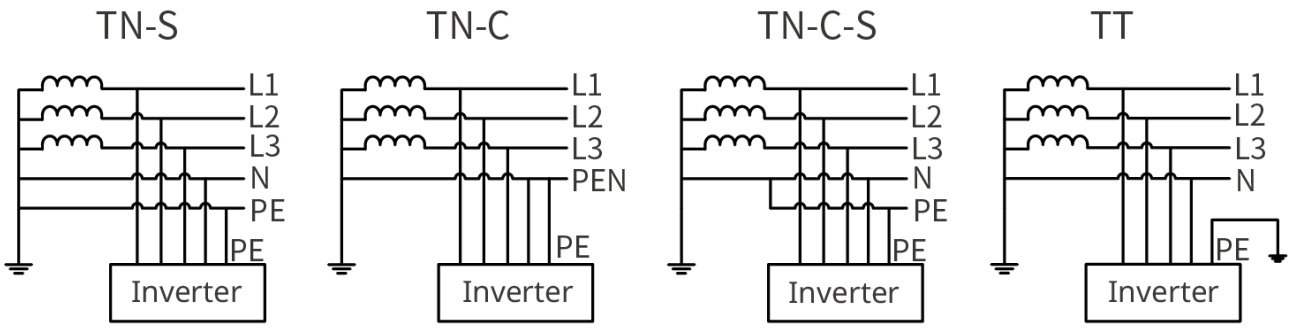

TNNET0003

2.4 System Working Mode

Self-Use Mode

- The fundamental operating mode of the system.
- PV generation prioritizes supplying power to the loads. Excess power charges the battery, and any remaining power is sold to the grid. When PV generation is insufficient to meet the loads' demand, the battery supplies power to the loads. When the battery power is also insufficient, the grid supplies power to the loads.

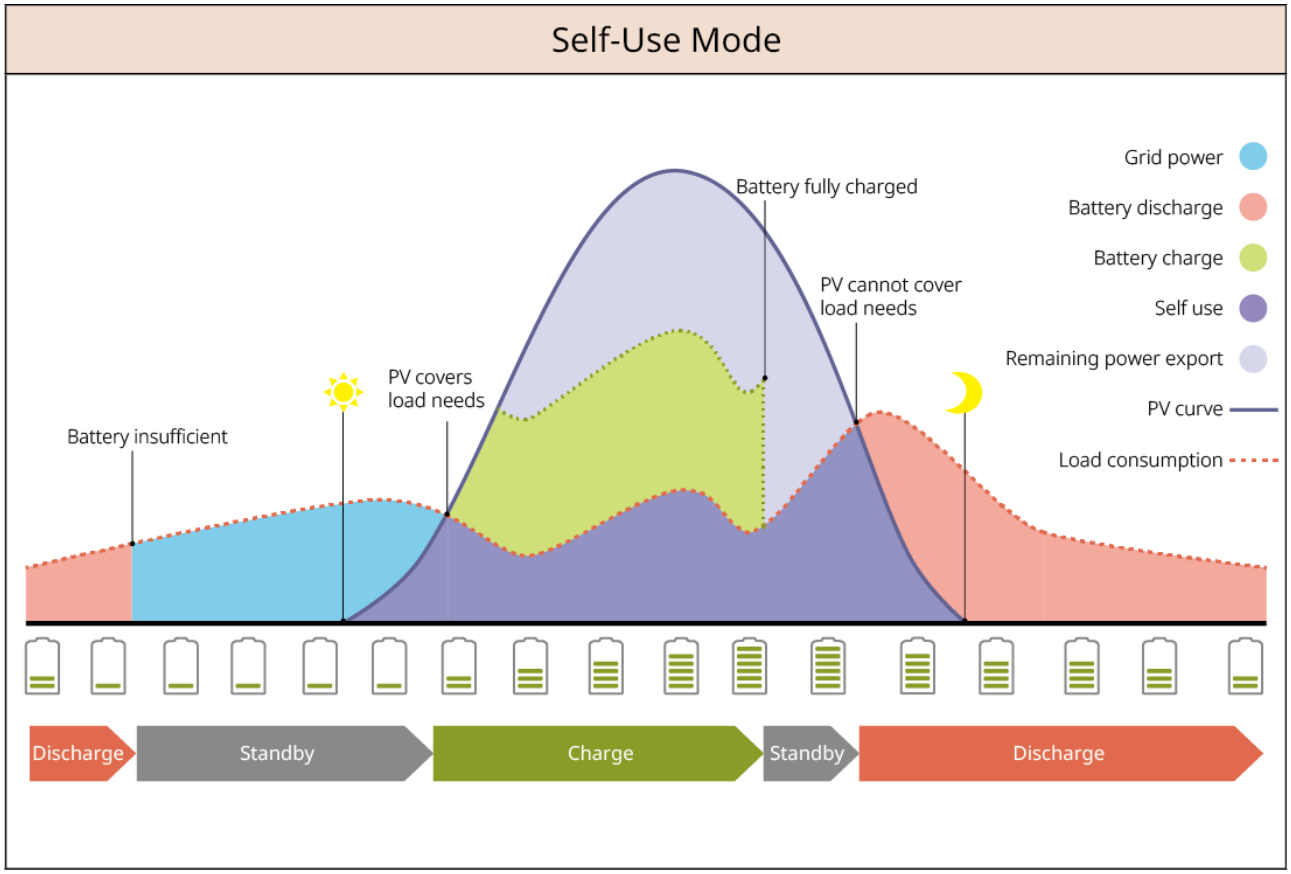

SLG00NET0009

Backup Mode

- Recommended for use in areas with an unstable grid.
- When the grid fails, the inverter switches to off-grid operation mode, and the battery discharges to supply power to the loads, ensuring uninterrupted power for the BACK-UP Loads. When the grid is restored, the inverter switches its operation mode back to grid-tied.
- To ensure the battery SOC is sufficient to maintain normal system operation during off-grid periods, the system will charge the battery using PV or grid power to the backup power SOC during grid-tied operation. If purchasing electricity from the grid to charge the battery is required, please ensure it complies with local grid regulations and laws.

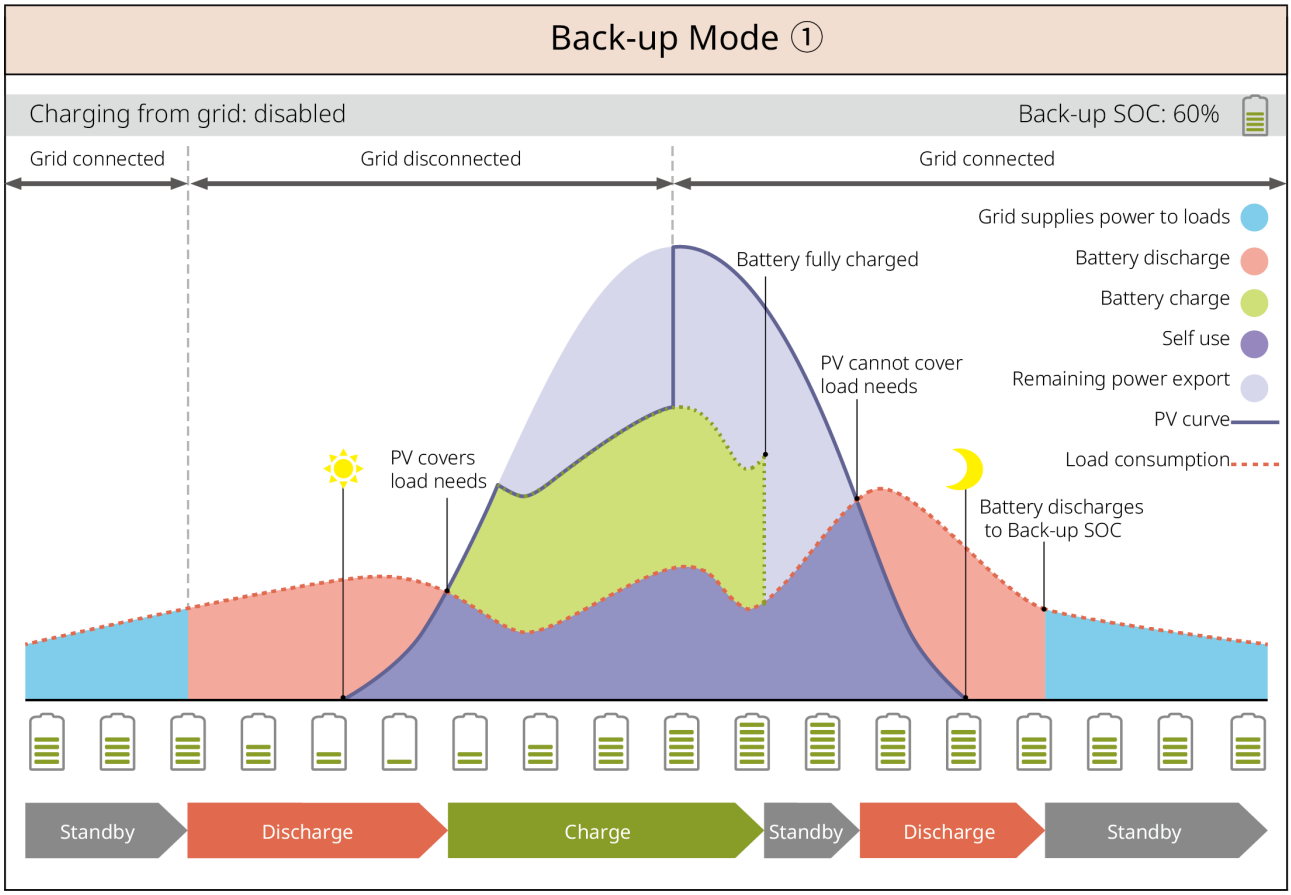

SLG00NET0002

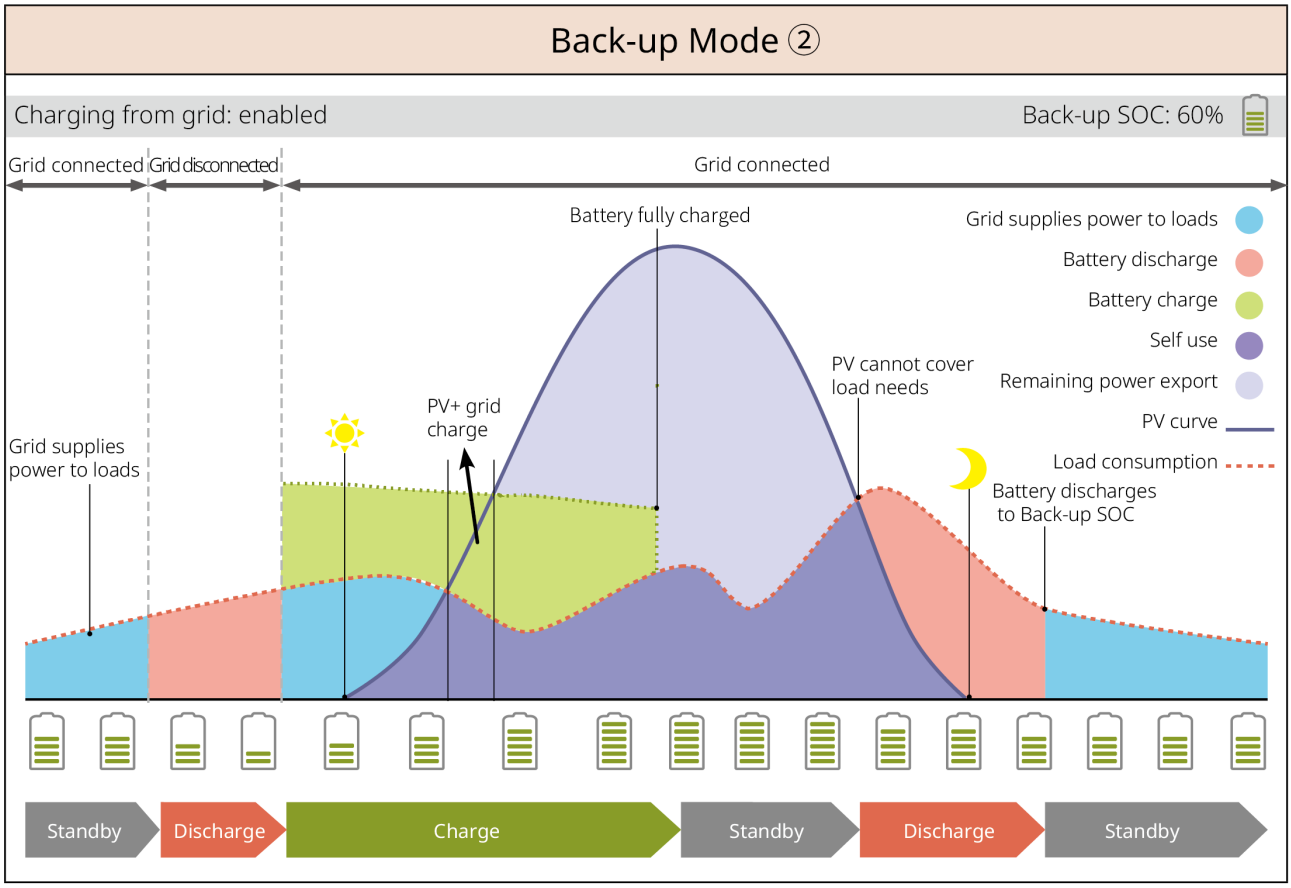

SLG00NET0003

TOU Mode

Subject to compliance with local laws and regulations, buy and sell electricity during different time periods based on peak and off-peak grid electricity price differences. For example: During off-peak price periods, set the battery to charging mode to purchase electricity from the grid for charging. During peak price periods, set the battery to discharging mode to supply power to the loads via the battery.

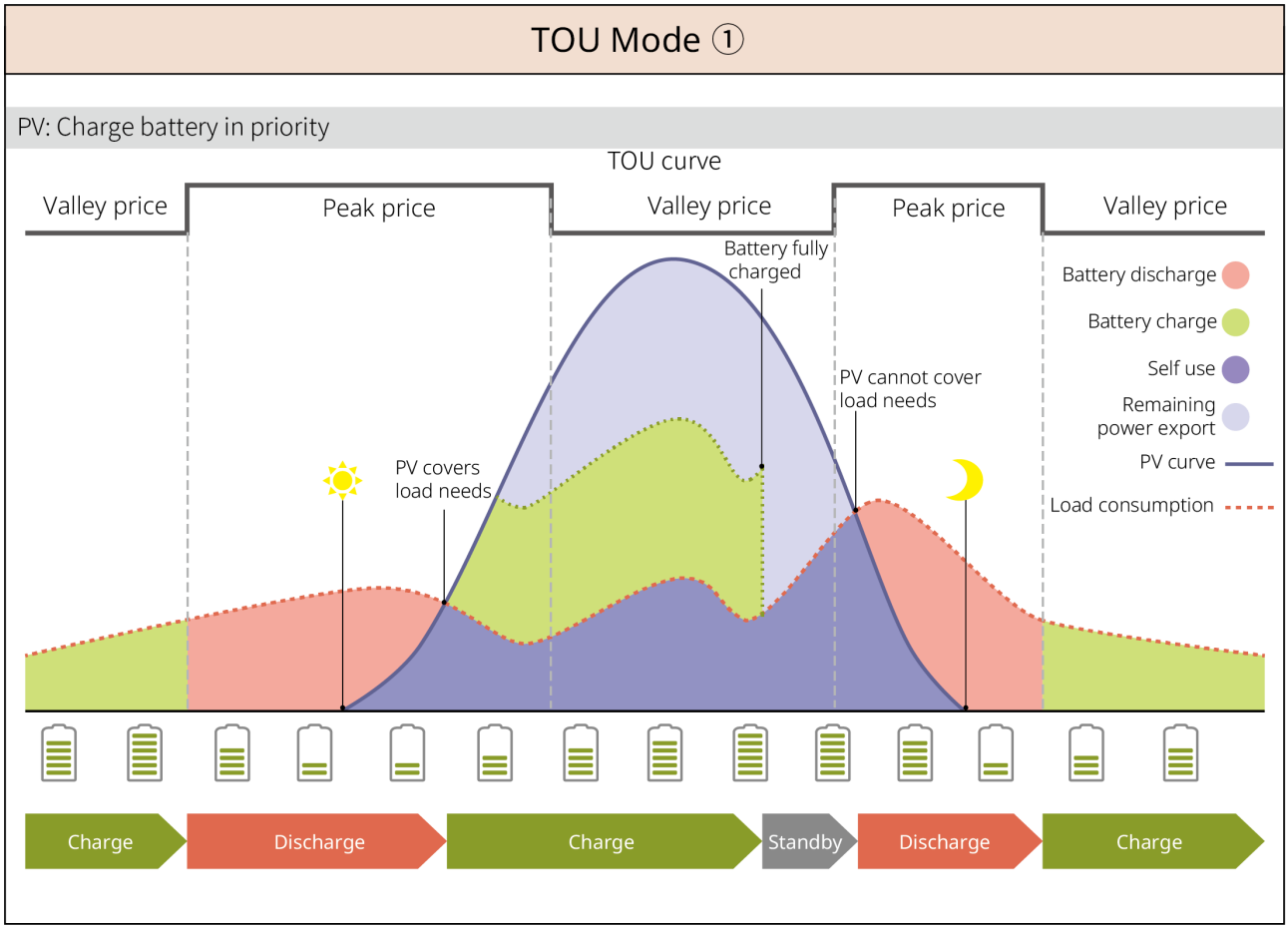

SLG00NET0004

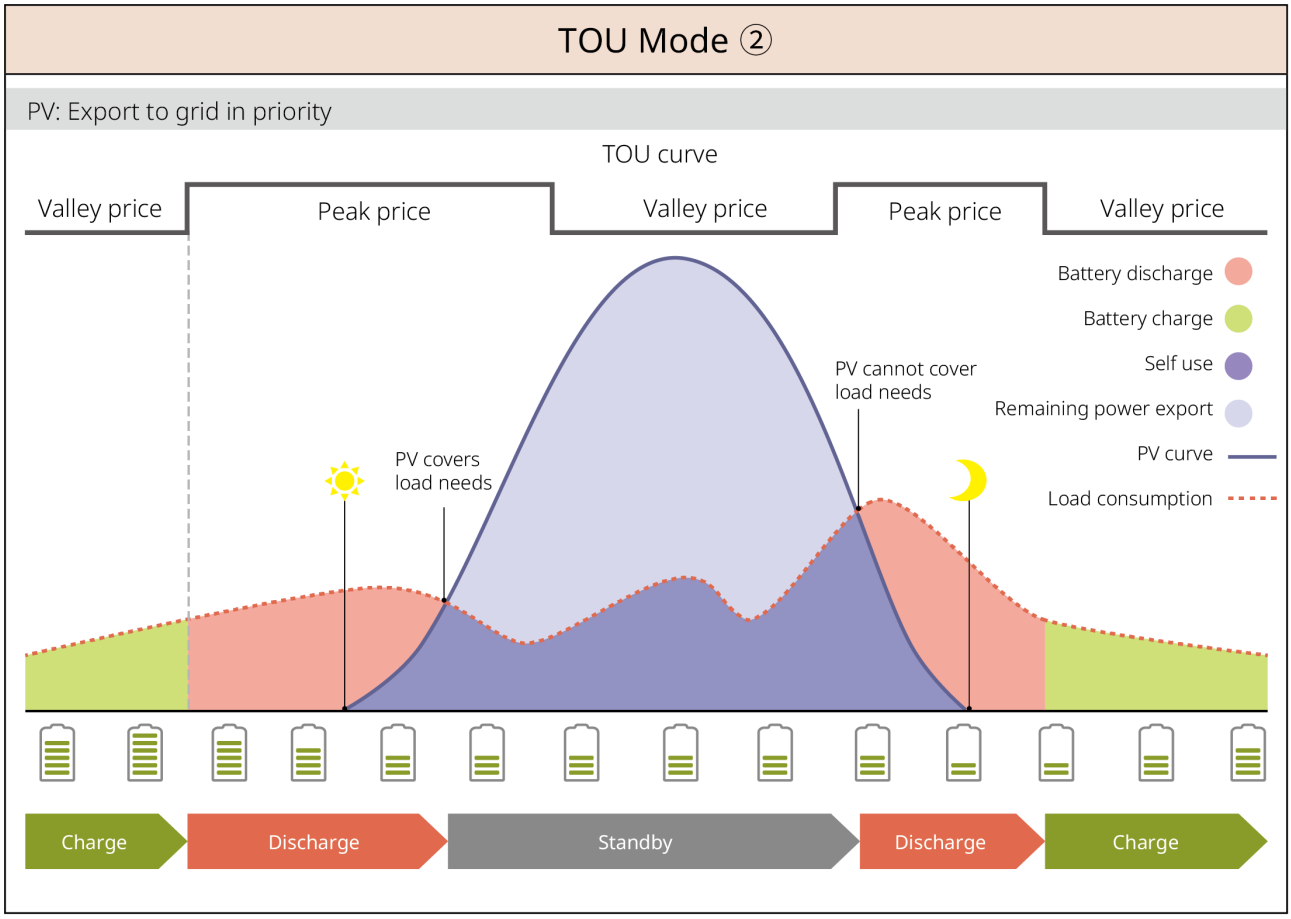

SLG00NET0005

Delayed Charging Mode

- Suitable for areas with grid-connected power output limitations.
- Setting a peak power limit can direct PV generation exceeding the grid-connection limit to charge the battery; or set a PV charging period to utilize PV generation for charging the battery during that period.

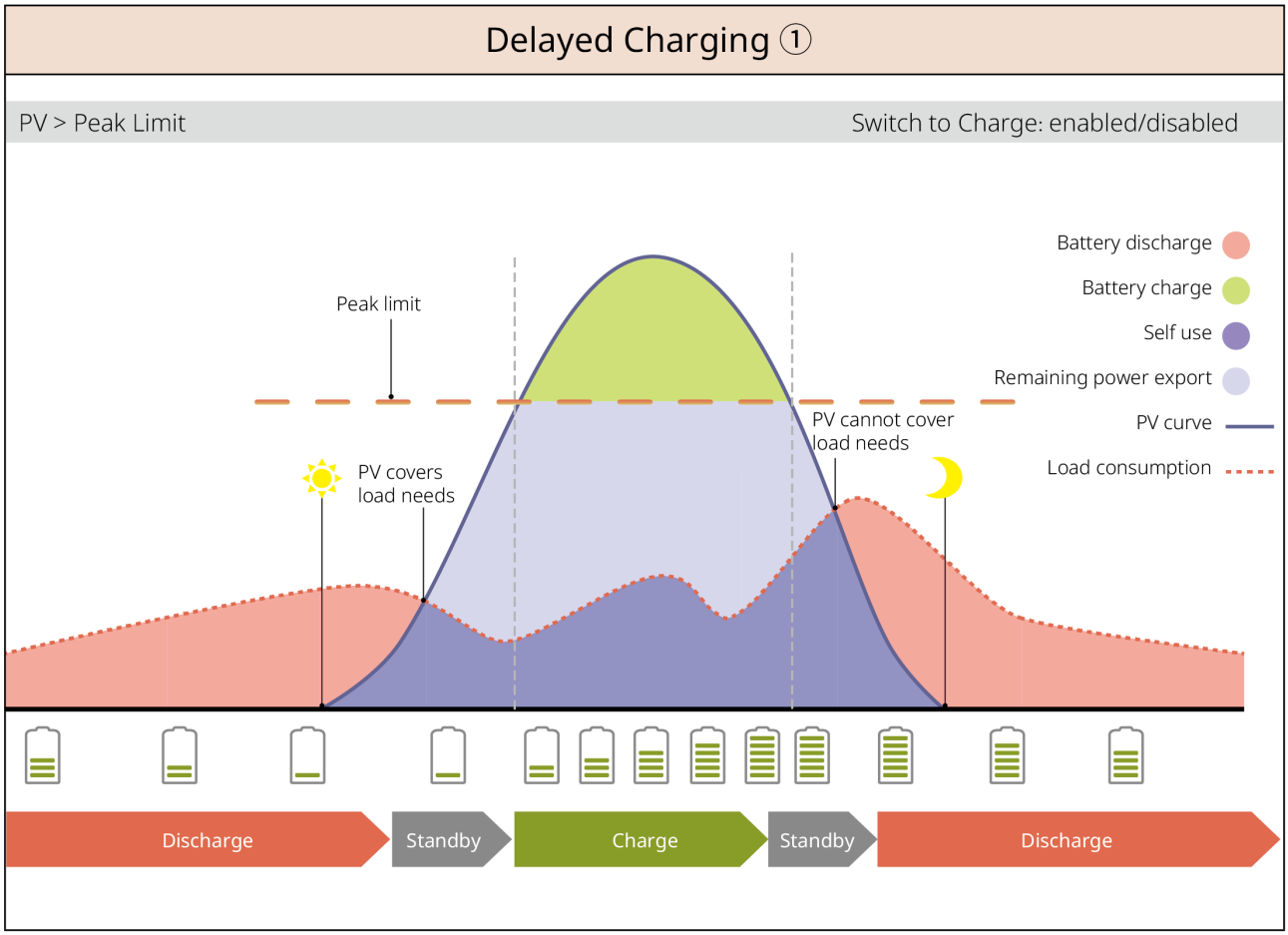

SLG00NET0006

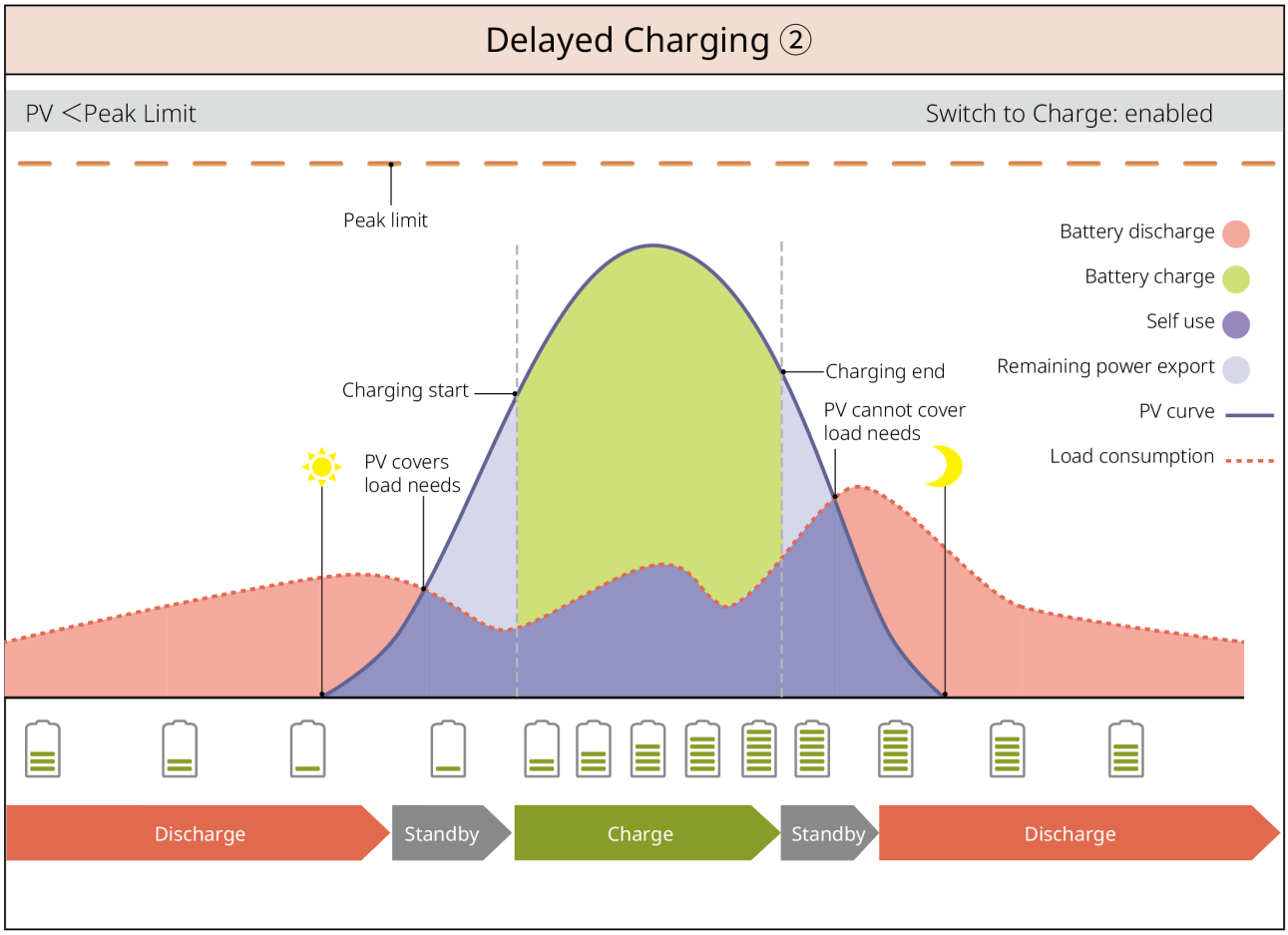

SLG00NET0007

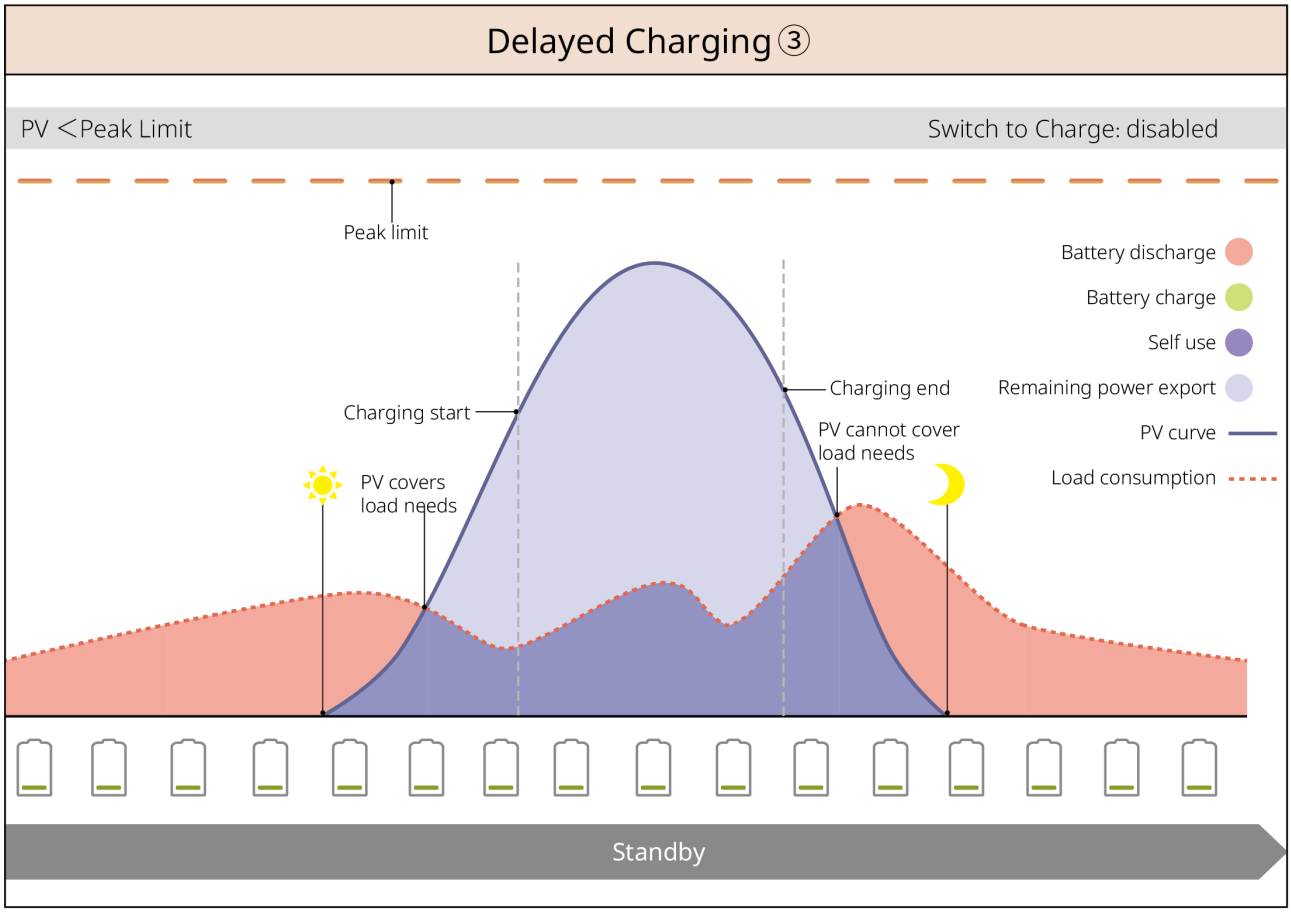

SLG00NET0008

Demand Control Mode

- Primarily applicable to commercial and industrial scenarios.
- When the total load power consumption exceeds the electricity quota within a short period, battery discharge can be utilized to reduce the portion of consumption exceeding the quota.
- When the SOC of both inverter battery strings is lower than the reserved SOC for demand control, the system purchases electricity from the grid based on the time period, load consumption, and the peak purchase power limit. When the SOC of only one inverter battery string is lower than the reserved SOC for demand control, the system purchases electricity from the grid based on the load consumption and the peak purchase power limit.

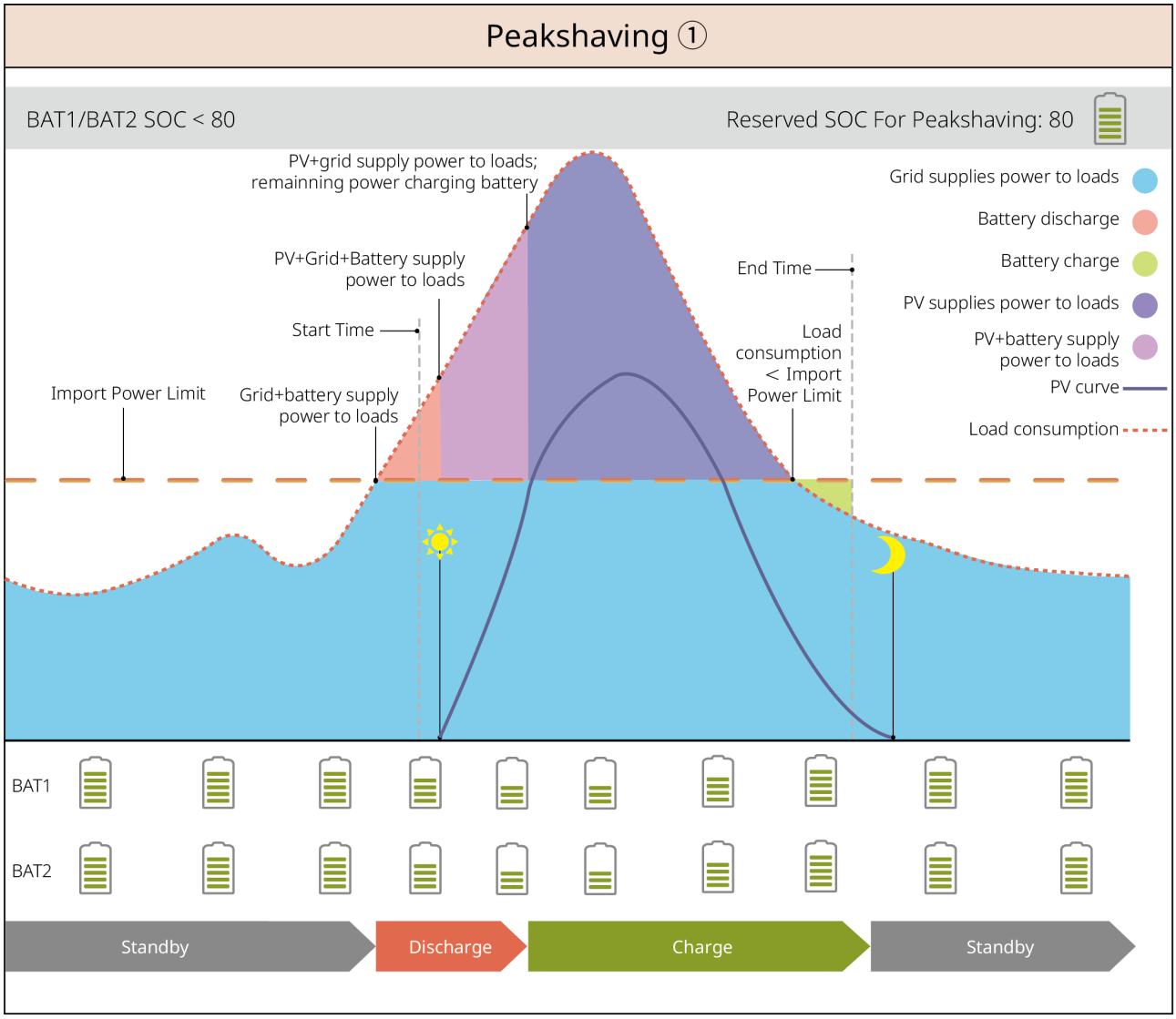

SLG00NET0010

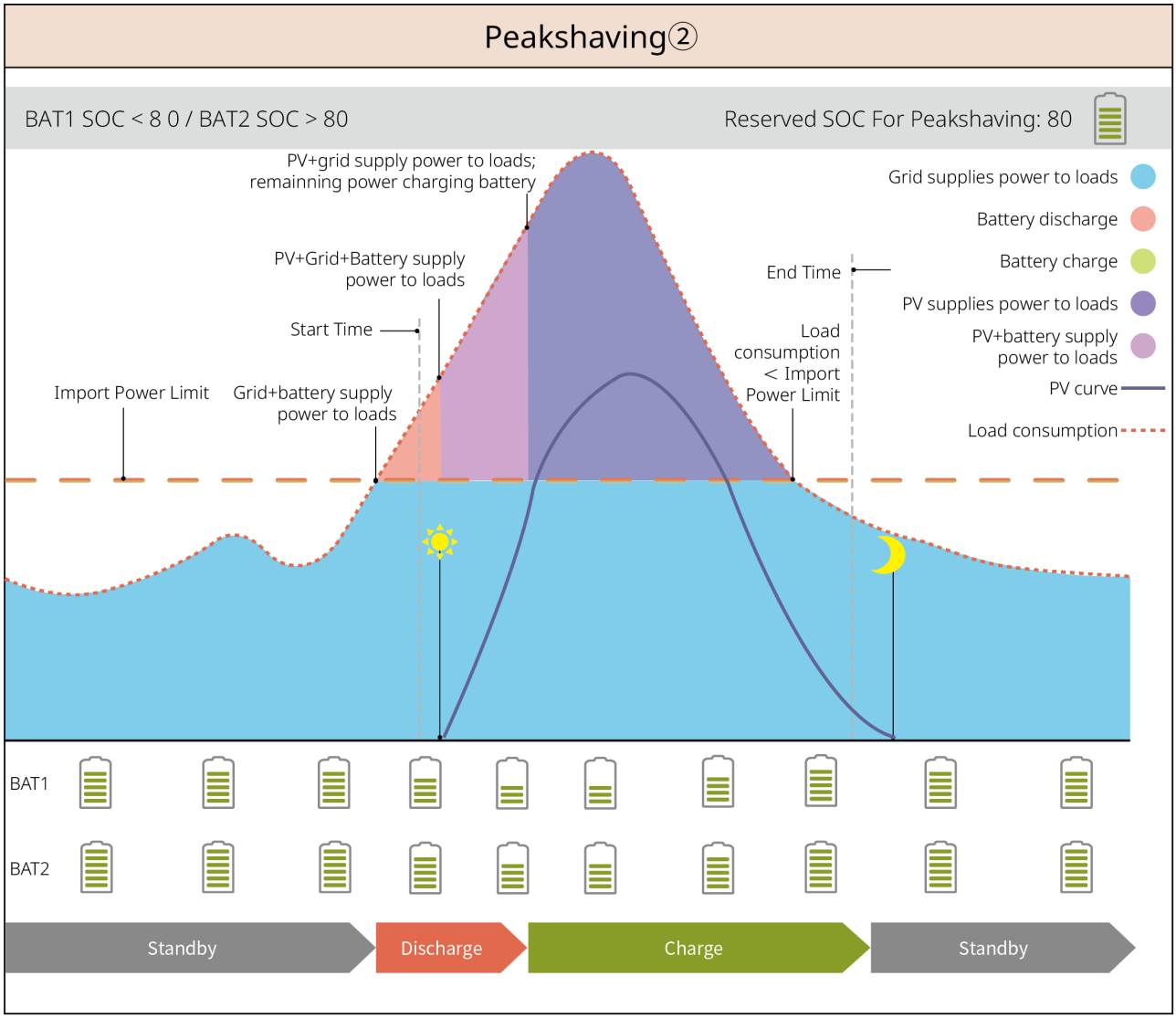

SLG00NET0011

Off-Grid Mode

NOTICE
Do not operate in pure off-grid mode when the inverter is not connected to the battery system.

When the grid fails, the inverter switches to off-grid operation mode.

- During the day, PV generation prioritizes supplying power to the loads, with excess power charging the battery.
- At night, the battery discharges to supply power to the loads, ensuring uninterrupted power for the BACK-UP Loads.
- Off-Grid SOC Recovery: After the system operates off-grid, the battery gradually

recovers to the minimum SOC level through PV generation or other power generation methods.

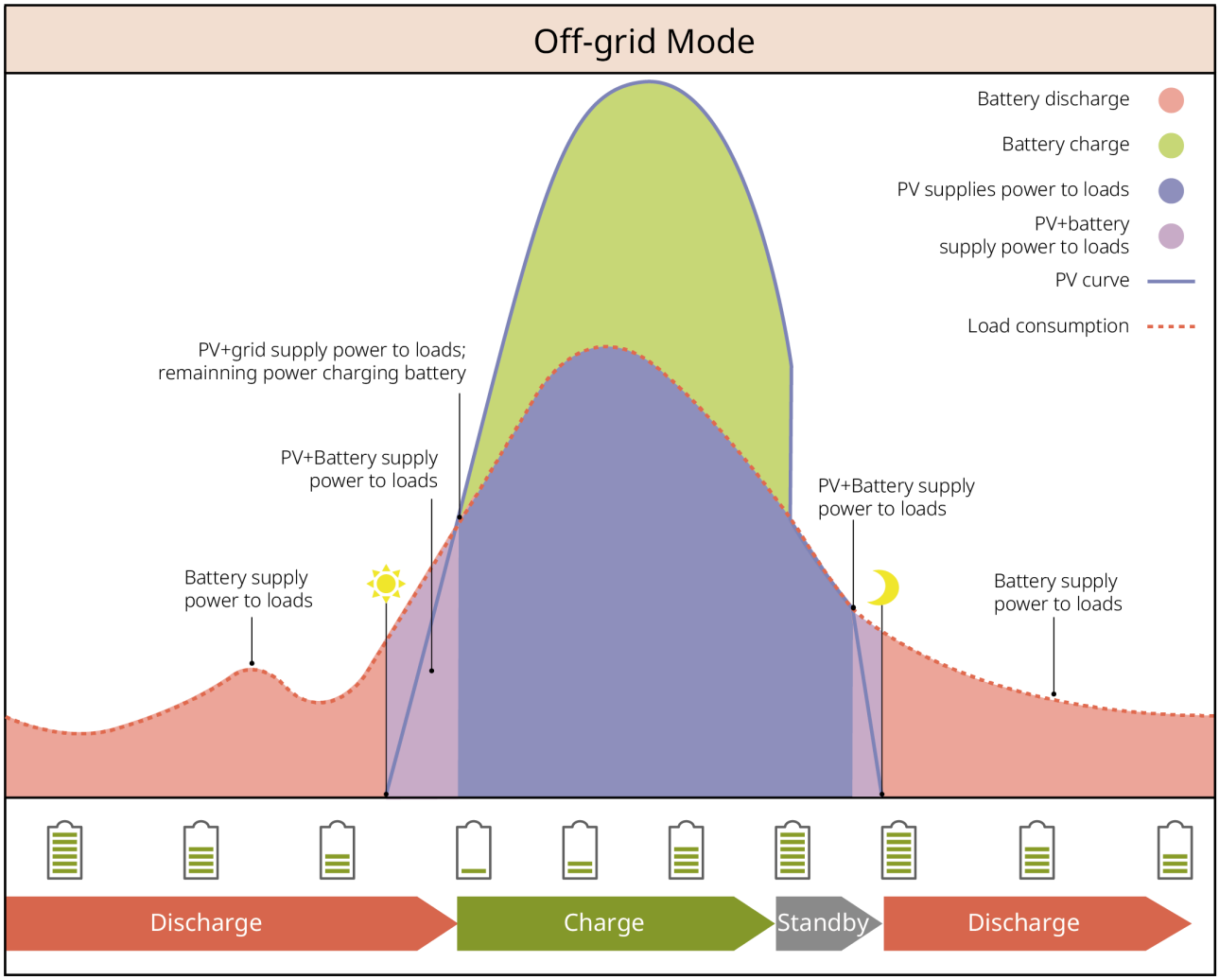

SLG00NET0012

2.5 Features

NOTICE
Specific features are subject to the product's actual configuration.

AFCI

The inverter integrates an AFCI circuit protection device to detect arc faults and quickly cut off the circuit when detected, thereby preventing electrical fires.

Causes of arc faults:

- Damaged connector connections in the PV system.
- Incorrect or damaged cable connections.
- Aging connectors or cables.

Arc Detection Method

- The inverter integrates AFCI functionality, complying with the IEC 63027 standard.
- When the inverter detects an arc fault, the time and fault phenomenon can be displayed via the App.
- After the inverter triggers an AFCI alarm, it will shut down for protection. The inverter will automatically reconnect to the grid and resume operation after the alarm is cleared.
  - Auto-reconnection: If the inverter triggers an AFCI alarm < 5 times within 24 hours, the alarm can be automatically cleared after five minutes, and the inverter will reconnect to the grid and resume operation.

Manual reconnection: If the inverter triggers the 5th AFCI alarm within 24 hours, the alarm must be cleared manually before the inverter can reconnect to the grid and resume operation.

model	Label	Description
GW12KL-ET	F-I-AFPE-1-2/2-2	F: Full coverage I: Integrated AFPE: Detection and interruption capability provided 1: 1 monitored string per input port 2/2: 2/2 input ports per channel 2: 2 monitored channels
GW15K-ET		
GW20K-ET		
GW18KL-ET	F-I-AFPE-1-2/4-2	F: Full coverage I: Integrated AFPE: Detection and interruption capability provided 1: 1 monitored string per input port 2/4: 2/4 input ports per channel 2: 2 monitored channels
GW20K-ET		
GW29.9K-ET		
GW30K-ET		

Three-Phase Unbalanced Output

The inverter's grid-tie port and BACK-UP port both support three-phase unbalanced output, allowing loads of different power ratings to be connected to each phase. The maximum output power per phase for different models is shown in the table below:

No.	model	Maximum Output Power per Phase
1	GW12KL-ET	4kW
2	GW18KL-ET	6kW
3	GW15K-ET	5kW
4	GW20K-ET	6.7kW
5	GW25K-ET	8.3kW
6	GW29.9K-ET	10kW
7	GW30K-ET	10kW

load control

The inverter's dry contact control port supports connecting additional contactors to control the switching on or off of loads. It supports household loads, heat pumps, etc.

The load control methods are as follows:

- Time control: Set the time to switch the load on or off. The load will automatically turn on or off within the set time period.
- Switch control: When the control mode is set to ON, the load will turn on; when set to OFF, the load will turn off.
- BACK-UP Loads control: The inverter has a built-in relay dry contact control port, which can control whether the load is switched off via the relay. In off-grid mode, if an overload is detected on the BACK-UP port and the battery SOC value falls below the off-grid protection setting, the load connected to the relay port can be switched off.

Rapid Shutdown（RSD）

In a rapid shutdown system, the rapid shutdown transmitter and receiver work together to achieve rapid system shutdown. The receiver maintains module output by receiving signals from the transmitter. The transmitter can be external or built into the inverter. In an emergency, by enabling an external triggering device, the transmitter can be deactivated, thereby shutting down the modules.

- External Transmitter
  - Transmitter Models: GTP-F2L-20, GTP-F2M-20
    https://en.goodwe.com/Ftp/Installation-instructions/RSD2.0-transmitter.pdf
  - Receiver Models: GR-B1F-20, GR-B2F-20
    https://en.goodwe.com/Ftp/EN/Downloads/User%20Manual/GW_RSD-20_Quick-Installation-Guide-POLY.pdf
- Built-in Transmitter
  - External Triggering Device: External switch
  - Receiver Models: GR-B1F-20, GR-B2F-20
    https://en.goodwe.com/Ftp/EN/Downloads/User%20Manual/GW_RSD-20_Quick-Installation-Guide-POLY.pdf

3 Check and Storage

3.1 Check Before Receiving

Before receiving the product, please carefully check the following:

1. Check if the outer packaging is damaged, such as deformation, holes, cracks, or other signs that might cause damage to the equipment inside the packaging. If damaged, do not open the packaging and contact your dealer.
2. Check if the device model is correct. If it does not match, do not open the packaging and contact your dealer.

3.2 deliverables

⚠WARNING

Check if the type and quantity of the delivered items are correct and if there is any damage to their appearance. If damaged, please contact your dealer.
After removing delivered items from the packaging, do not place them on rough, uneven, or sharp surfaces to avoid paint chipping.

3.2.1 Inverter Deliverables

Part	Description	Part	Description
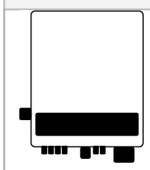	Inverter x 1	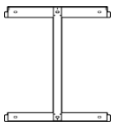	Backplate x 1
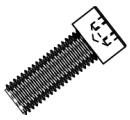	Wall-mounting fastening screws x 2	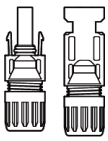	PV connector GW12KL-ET, GW15K-ET, GW20K-ET: 4 GW18KL-ET, GW25K-ET, GW29.9K-ET, GW30K-ET: 6

Part	Description	Part	Description
	PV wiring tool x 1		7PIN communication terminal x 1
	6PIN communication terminal x 1		3PIN communication terminal x 1
	Protective PE screw x 1		PIN terminal x N The quantity of PIN terminals provided with the box varies depending on the inverter configuration. Please refer to the actual shipment.
	Grounding terminal x 1		BMS/Meter Communication cable GW12KL-ET, GW15K-ET, GW20K-ET: 2 GW18KL-ET, GW25K-ET, GW29.9K-ET, GW30K-ET: 3
			Expansion bolt x 6

Part	Description	Part	Description
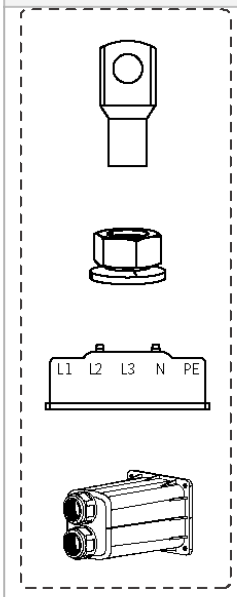 or 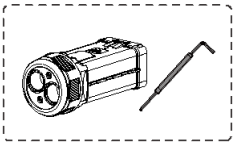	Please refer to the actual shipment • OT terminal x 12 • AC terminal flange nut x 20 • Insulation board for AC terminal x 1 • AC terminal protective cover x 1 • Hexagon screwdriverx 1	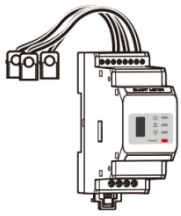 or 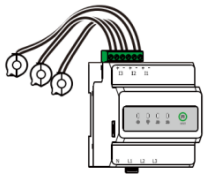	Smart meter and accessories x 1 Please refer to the actual shipment
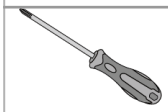	screwdriver x 1	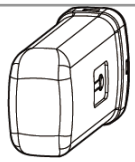 or 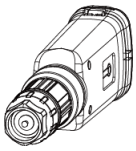	smart dongle x 1
	Product documentation x 1		
Wiring tool 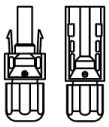 Battery connector	(Optional) Wiring tool x 1 Battery connector: GW12KL-ET, GW15K-ET, GW20K-ET: 1 GW18KL-ET, GW25K-ET, GW29.9K-ET, GW30K-ET: 2		

Part	Description	Part	Description
Wiring tool Hexagon screwdriver 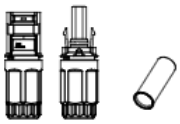 Battery connector	(Optional) Wiring tool x 2 Hexagon screwdriverx 1 Battery connector: GW12KL-ET, GW15K-ET, GW20K-ET: 1 GW18KL-ET, GW25K-ET, GW29.9K-ET, GW30K-ET: 2		

Part	Description	Part	Description
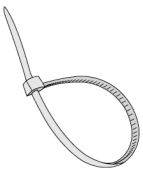	cable tie x 10	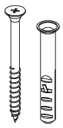	expansion bolt x 4
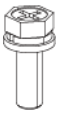	M5 hex screw x 10		M5 nut x 5
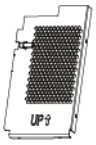	Right side panel of protective cover x 1		Left side panel of protective cover x 1
	Bottom panel of protective cover x 1		Front cover panel of protective cover x 1

Table39 **Protective Cover Accessory (Australia Only)**

3.2.2 Batteries Deliverables

3.2.2.1 Lynx C Series 60kWh Industrial & Commercial Battery System

Component	Quantity	Component	Quantity
or	Battery system x 1 GW60KWH-D-10: Includes AC cabinet GW60KWH-D-10 (without extension cabinet): Does not include AC cabinet		• Battery-to-battery connection aluminum busbar When all busbars are shipped with accessories, the quantity in accessories is 10 • When some busbars are shipped with accessories, the quantity in accessories is 3 (other busbars are pre-installed on the battery)

Component	Quantity	Component	Quantity
	Battery-to-high voltage box connection aluminum busbar • When the busbar is shipped with accessories, the quantity in accessories is 1 • When the busbar is pre-installed on the battery for shipment, the quantity in accessories is 0		Battery-to-high voltage box fixing screw x 2
	Battery-to-battery fixing screw • When all busbars are shipped with accessories, the quantity of screws in accessories is 22 • When some busbars are shipped with accessories, the quantity of screws in accessories is 6		Lifting ring x 4
	Inverter Back-up terminal block x 5		M12 waterproof component x 2

Component	Quantity	Component	Quantity
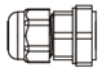	M18 waterproof component x 2		M20 waterproof component x 2
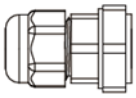	M22 waterproof component x 4		cable tie x 10
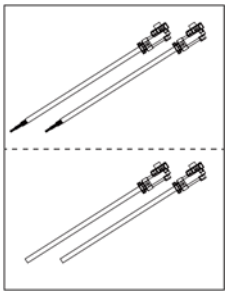	Inverter-to-high voltage box power cable GW60KWH-D-10 (without extension cabinet): 0 GW60KWH-D-10: 1	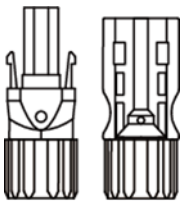	Inverter battery terminal block GW60KWH-D-10 (without extension cabinet): 0 GW60KWH-D-10: N N: Please refer to the actual product shipment
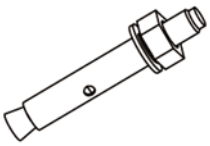	Expansion screw x 4	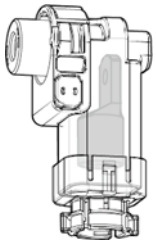	High voltage box power terminal block GW60KWH-D-10 (without extension cabinet): 2 GW60KWH-D-10: 1
	Air conditioning water pipe x 1		M5 nut x 9

Component	Quantity	Component	Quantity
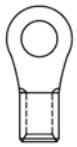	Grounding terminal x 1	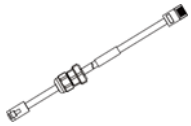	Inverter-to-high voltage box communication cable GW60KWH-D-10: 1 GW60KWH-D-10 (without extension cabinet): 0
	Product documentation x 1	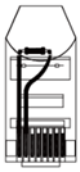	Terminating resistor x 2 GW60KWH-D-10 (without extension cabinet): 1 GW60KWH-D-10: 0
	Wrench x 0: Fire department has "Do Not Touch" label Wrench x 1: Other	-	-

3.2.2.2 BAT-S Series 15.3-56.3kWh High Voltage Battery

NOTICE
Supported configurations and installation plans vary by region. For details, please contact sales.

Battery Pack

Component	Description
Stacked Installation 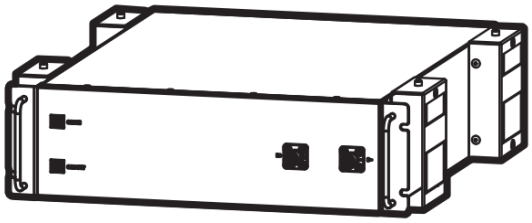	Battery PACK • GW15.3-BAT-I-G10: × 3 • GW20.4-BAT-I-G10: × 4 • GW25.6-BAT-I-G10: × 5 • GW30.7-BAT-I-G10: × 6 • GW35.8-BAT-I-G10: × 7 • GW40.9-BAT-I-G10: × 8 • GW46.0-BAT-I-G10: × 9 • GW51.2-BAT-I-G10: × 10 • GW56.3-BAT-I-G10: × 11
Rack Installation 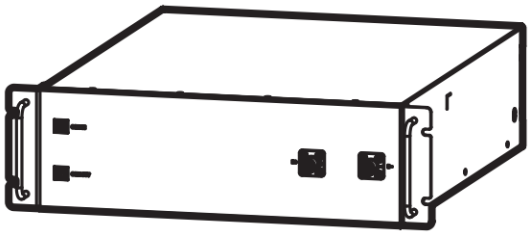	

PCU

Part	Description
Stack Installation 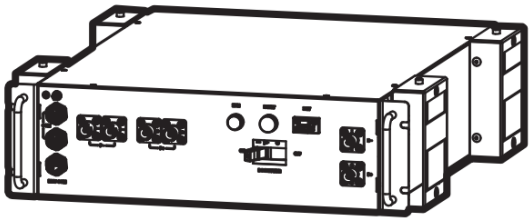	PCU × 1
Rack Installation 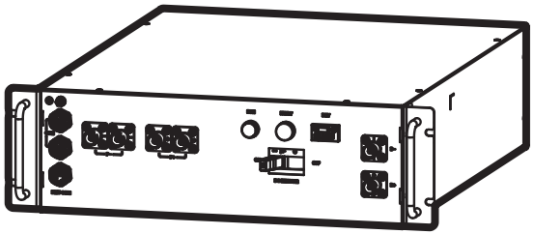	

Accessories

- **Stack Mounting**

Part	Description	Part	Description
	Ground lock bracket×4		Wall lock bracket×4
	Equipotential bonding strip×15		M5 screw×N
	Cable gland×1		Expansion bolt×8
	Adjustable foot×4		Base×1
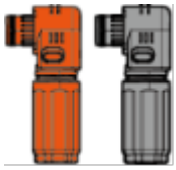	Power connector×2	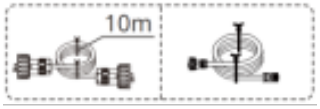	Battery to inverter communication cable×1
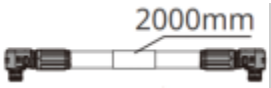	B- power cable×1		B+ power cable×1
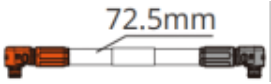	Internal battery power cable ×N	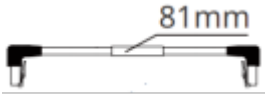	Internal battery communication cable ×N
	Grounding terminal ×2		M12 expansion bolt ×4

Part	Description	Part	Description
	Nameplate×1		Cable tie×10
	adapter bonnet×4 (Included only for units shipped after April 3, 2026)		Product documentation×1

- **Rack Mounting**

Part	Description	Part	Description
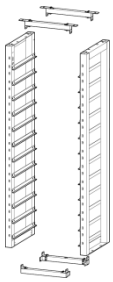	Battery Rack ×1		Rubber Pad×4
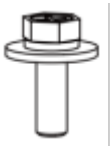	M5 screw×N	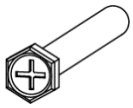	ST6.3 screw×4
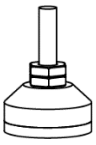	Adjustable Feet×4	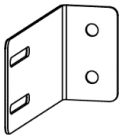	Wall Mounting Bracket×2
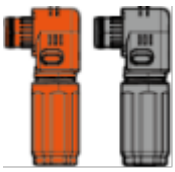	Power Connector×2	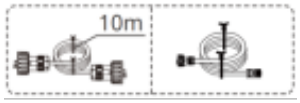	Battery to Inverter Communication Cable×1
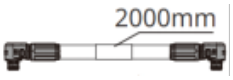	B- Power Cable×1		B+ Power Cable×1

Part	Description	Part	Description
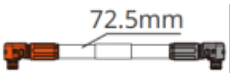	Internal Battery Power Cable×N	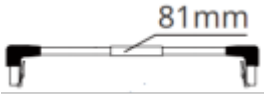	Internal Battery Communication Cable×N
	Grounding terminal×2		M12 Expansion Bolt×4
	Nameplate×1		Cable Tie×10
	adapter bonnet×1		Product Documentation×1

3.2.2.3 BAT Series 61.4-112.6kWh Industrial & Commercial Battery System

Component	Description	Component	Description
	battery cabinet×1		Expansion screw×4
	Grounding M5 screw×3		Grounding terminal×3
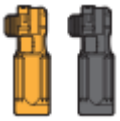	Inverter battery connection terminal 25mm²×2	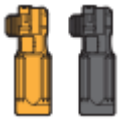	Inter-battery connection terminal 50mm²×2

Component	Description	Component	Description
	Pack series wiring harness×N • GW61.4-BAT-AC-G10：×5 • GW92.1-BAT-AC-G10：×8 • GW102.4-BAT-AC-G10：×9 • GW112.6-BAT-AC-G10：×10		Pack negative to high-voltage box negative wiring harness×1
	Inverter battery connection (positive)×1 Inverter battery connection (negative)×1		Adapter bracket×2 (Required for ET100 only)
	Battery to inverter communication network cable×1		Air conditioner power supply wiring harness kit×1
	Lifting ring×4		Cable tie×20
	Air conditioner water pipe kit×1		fireproofing mud×8
	Corrugated pipe connector×6		25mm² to 10mm² round tube terminal×4
	Product documentation×1	-	-

3.2.3 Smart Meter Deliverables (GM3000)

Part	Quantity	Part	Quantity

	Smart meter and CT x 1		2PIN terminal and RJ45 terminal adapter cable x 1
	PIN terminal x 3		USB plug x 1
	screwdriver x 1		Product documentation x 1

3.2.4 Smart Meter Deliverables GM330&GMK330

3.2.4.1 Attachment List

Component	Description	Component	Description
	Smart Meter x1 GMK330: CT×3; GMK360: CT×6; GM330: CT x 0.		2PIN Communication Terminal x1 For GM330.
	6PIN Communication Terminal x1 For GM330.		7PIN Communication Terminal x1 For GM330.
	Meter Communication Terminal For GMK330/GMK360.		RS485 Communication Terminal x 1
	2PIN Terminal to RJ45 Terminal Adapter Cable x 1		screwdriver x1

Component	Description	Component	Description
	PIN terminal GMK330/GMK360: x 5 ; GM330: x 6.		Product Documentation x 1

3.3 Storage

NOTICE
[1] Storage time is calculated from the SN date on the battery outer packaging. After exceeding the storage cycle, charging and discharging maintenance is required. (Battery maintenance time = SN date + charging and discharging maintenance cycle). For the method to view the SN date, refer to: 10.4.SN Code Meaning(Page 320). [2] After charging and discharging maintenance is qualified, if there is a Maintaining Label on the outer box, please update the maintenance information on the Maintaining Label. If there is no Maintaining Label, please record the maintenance time and battery SOC yourself and keep the data properly to facilitate the preservation of maintenance records.

If the device is not put into use immediately, please store it according to the following requirements. After long-term storage, the device must be inspected and confirmed by professionals before it can be used.

1. If the inverter is stored for more than two years or not operated for more than 6 months after installation, it is recommended to have it inspected and tested by professionals before putting it into use.
2. To ensure the good electrical performance of the internal electronic components of the inverter, it is recommended to power it on every 6 months during storage. If it has not been powered on for more than 6 months, it is recommended to have it inspected and tested by professionals before putting it into use.
3. To protect battery performance and service life, it is recommended to avoid long-term idle storage. Prolonged storage may cause deep discharge of the battery, leading to irreversible chemical loss, capacity attenuation, or even complete failure. It is advised to use it promptly. If the battery needs long-term storage, please maintain it according to the following requirements:

Battery	Battery Storage Initial SOC Range	Recommended Storage Temperature	Charge/Discharge Maintenance Cycle[1]	Battery Maintenance Method[2]
Lynx C Series 60kWh Commercial & Industrial Battery System	30%~40%	0~35℃	-20~0℃, ≤1 month 0~+35℃, ≤6 months 35~+45℃, ≤1 month	Please consult the dealer or after-sales service center for the maintenance method.
BAT-S Series 15.3-56.3kWh High Voltage Battery	30%~40%	0~35℃	-20~35℃ (≤12 months) 35~+45℃ (≤6 months)	
BAT-C Series 61.4-112.6kWh Commercial & Industrial Battery System				

Packaging Requirements:

Ensure that the outer packaging box is not removed and the desiccant inside the box is not lost.

Environmental Requirements:

1. Ensure that the device is stored in a cool place, avoiding direct sunlight.
2. Ensure the storage environment is clean, with appropriate temperature and humidity ranges, and no condensation. If there is condensation on the device ports, do not install the device.
3. Ensure that the device is stored away from flammable, explosive, corrosive, and other hazardous materials.

Stacking Requirements:

1. Ensure that the stacking height and direction of the inverters are arranged according to the instructions on the packaging box labels.

2. Ensure that there is no risk of tipping after the inverters are stacked.

4 Installation

DANGER

When performing equipment installation and electrical connections, please use the components delivered with the shipment. Otherwise, any resulting equipment damage will not be covered by the warranty.

4.1 System Installation and Commissioning Procedure

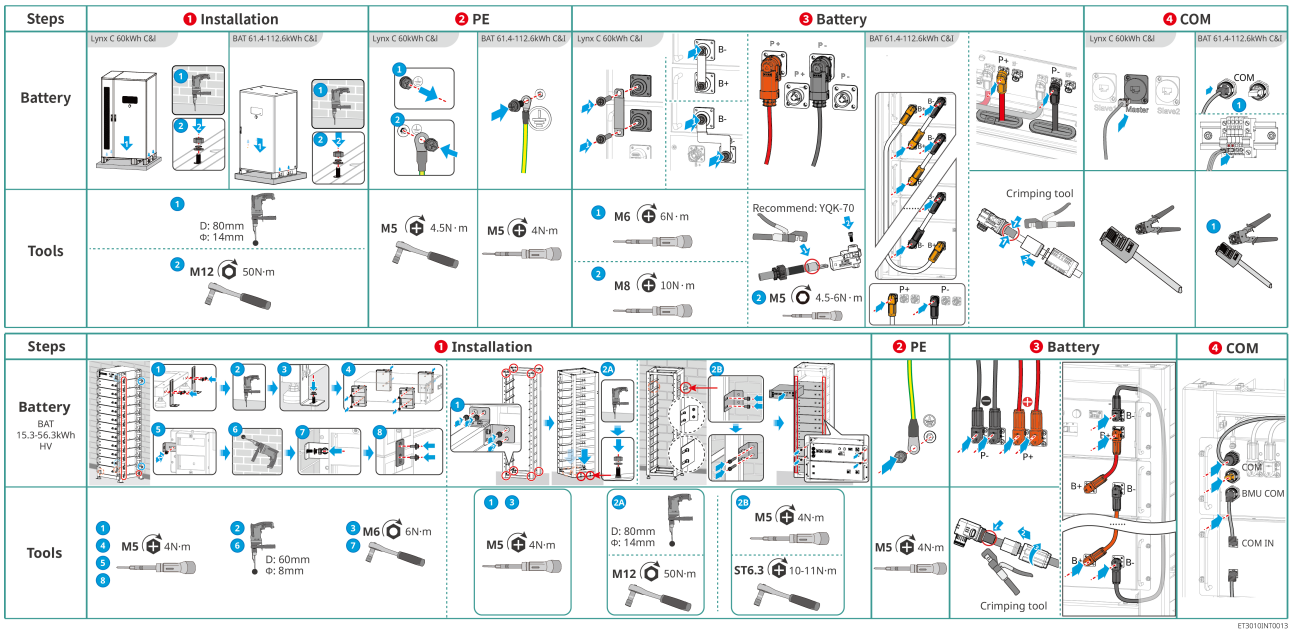

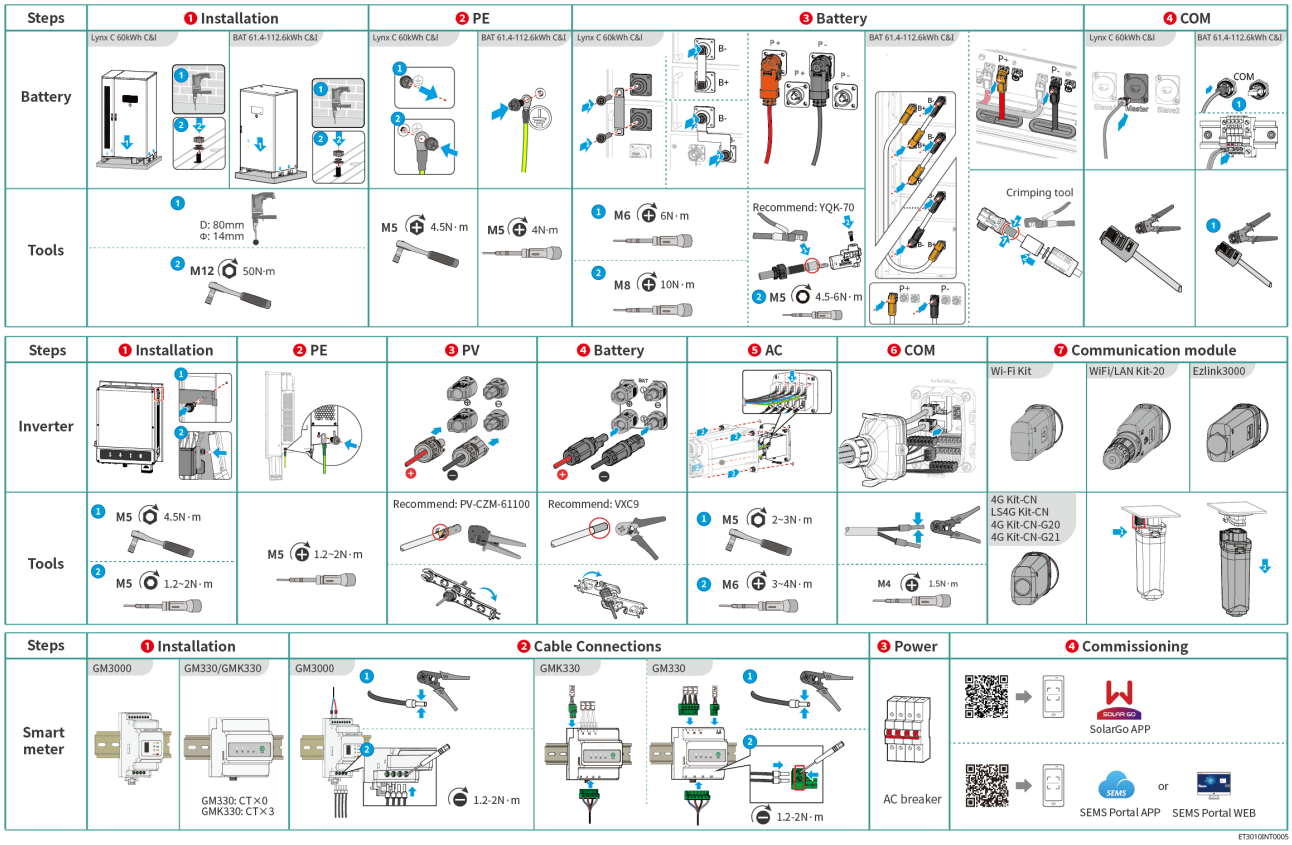

4.2 Installation Requirements

4.2.1 Installation Environment Requirements

NOTICE
If installed in an environment below 0°C, the battery will be unable to recharge and restore energy after being depleted, resulting in battery undervoltage protection. GW60KWH-D-10：Charging temperature range: 0<T<55°C；Discharging temperature range: -25<T<55°C

1. The equipment must not be installed in flammable, explosive, corrosive, or similar environments.
2. The temperature and humidity of the equipment installation environment must be within a suitable range.
3. The installation location must be out of reach of children and avoid easily accessible positions.
4. During Inverter operation, the enclosure temperature may exceed 60°C. Do not touch the enclosure before it cools down to prevent burns.
5. The Inverter should be installed in a location sheltered from direct sunlight, rain,

snow accumulation, etc. It is recommended to install it in a covered position; a sunshade can be constructed if necessary.

6. Adverse environmental conditions such as direct sunlight and high temperatures may cause the Inverter output power to be derated.
7. The installation space must meet the equipment's ventilation, heat dissipation, and operational space requirements.
8. The installation environment must satisfy the equipment's protection rating.
   - Inverters and Smart Communication Sticks are suitable for both indoor and outdoor installation;
   - Electricity meters are suitable for indoor installation;
   - Lynx C Series 60kWh Commercial & Industrial Battery System and BAT-C Series 61.4-112.6kWh Commercial & Industrial Battery System are suitable for indoor and outdoor installation. The BAT-S Series 15.3-56.3kWh High Voltage Battery is suitable for indoor installation and must be kept ventilated.
9. When installing equipment indoors, ensure there are no obstacles within a 10-meter diameter of the installation location.
10. During construction and installation, ensure the bottom of the equipment is higher than the local historical highest water level.
11. The installation height of the equipment should facilitate operation and maintenance, ensuring the equipment indicator lights, all labels are easily viewable, and the wiring terminals are easily accessible.
12. The installation altitude of the equipment must be below the maximum operating altitude.
13. The battery system must be installed on a flat, dry ground surface. It must not be placed in a recessed or sloped area and is strictly prohibited from being installed on ground prone to water accumulation or sinking. Ensure the ground can bear the weight of the battery system.
14. Before installing equipment outdoors in salt damage areas, consult the equipment manufacturer. Salt damage areas mainly refer to regions within 500m of the coastline. The affected area is related to sea wind, precipitation, terrain, etc.
15. Keep away from strong magnetic field environments to avoid electromagnetic interference. If there are radio stations or wireless communication equipment operating below 30MHz near the installation location, install the equipment according to the following requirements:
    - Inverter: Add a ferrite core with multiple windings on the Inverter's DC input or AC output lines, or add a low-pass EMI filter; OR the distance between the Inverter and the wireless electromagnetic interference source should exceed 30m.
    - Other equipment: The distance between the equipment and the wireless

electromagnetic interference source should exceed 30m.

16. The length of DC and communication cables between the battery and the Inverter must be less than 3m. Please ensure the installation distance between the Inverter and the battery meets the cable length requirement.

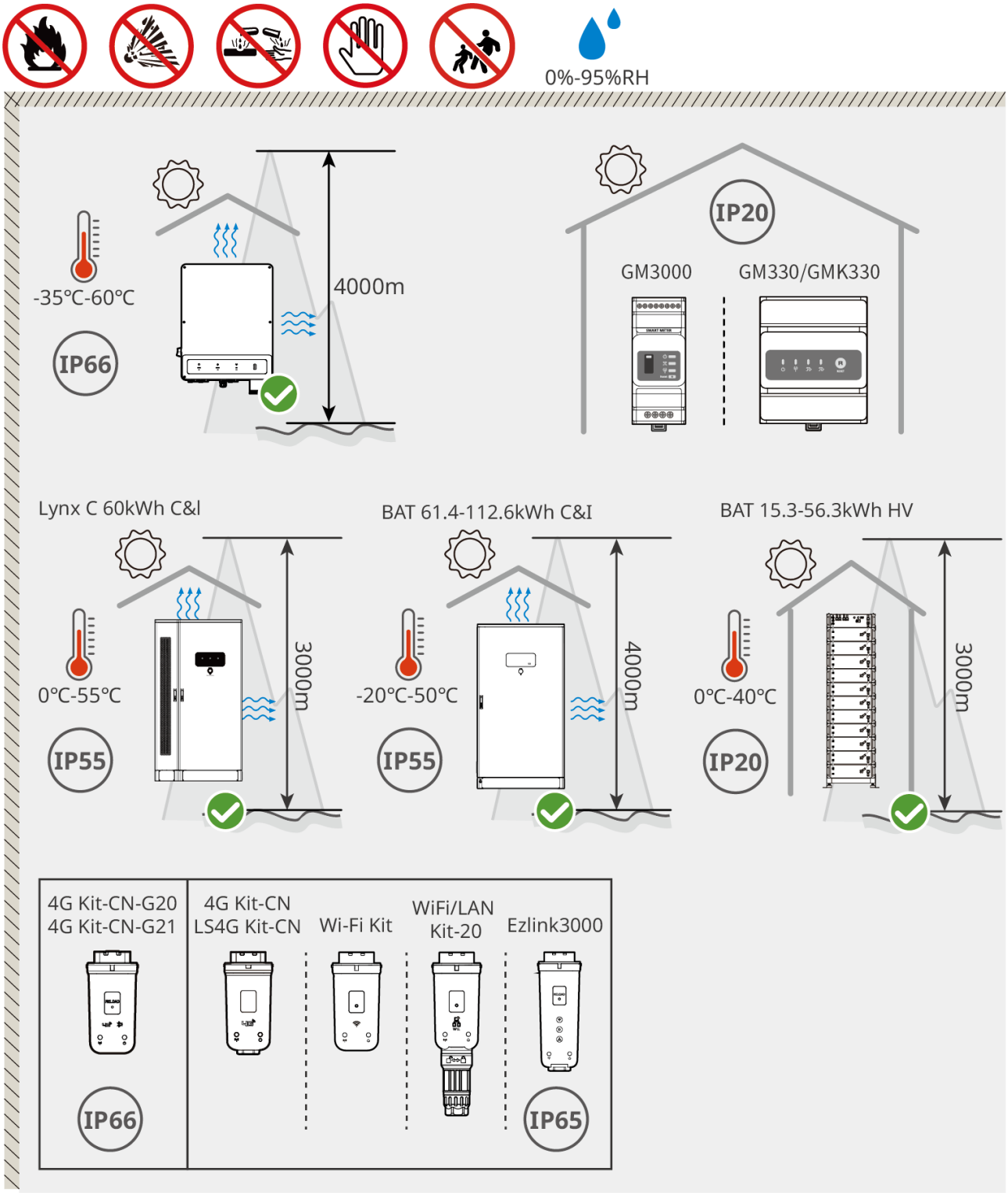

ET3010INT0007

4.2.2 Foundation Installation Requirements

1. The foundation material must be C25 plain concrete hardened ground or other

non-combustible surfaces.

2. The foundation must have pre-reserved trenches or cable outlets to facilitate equipment cabling.
3. Equipment (including height, embedded expansion screw parts, conduits, etc.) should be adjusted according to the process and on-site conditions.
4. The top elevation of the equipment foundation can be adjusted according to the equipment and actual on-site requirements.
5. Ensure the equipment is installed level and must not be tilted or inverted.
6. Trench Requirements:
   - If the equipment uses bottom cable entry, the trench must have a dust-proof and rodent-proof design to prevent foreign objects from entering.
   - The trench must have a waterproof and moisture-proof design to prevent cable aging and short circuits, which could affect the normal operation of the equipment.
   - As the equipment cables are relatively thick, sufficient space for the cables must be reserved in the trench design to ensure smooth and unworn cable connections.

NOTICE
The conduit may be replaced with four 125mm-diameter PVC pipes on-site. Conduit does not need to be pre-installed for indoor environments.

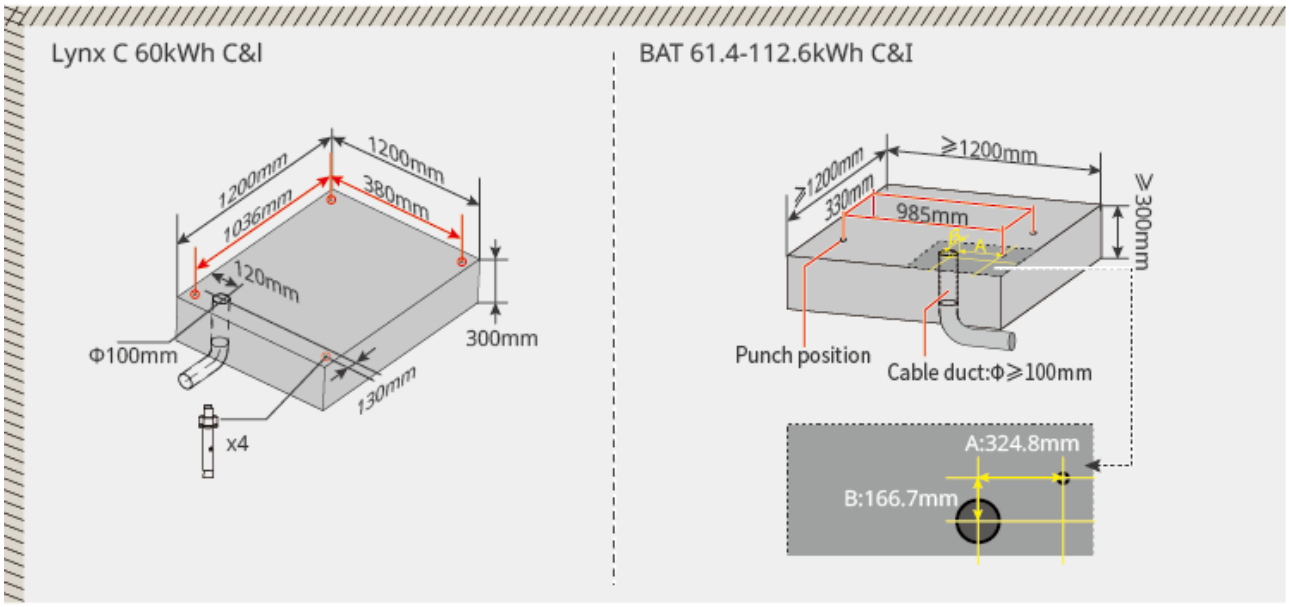

LXC6010INT0001

4.2.3 Installation Space Requirements

When installing devices in the system, sufficient space should be reserved around the devices to ensure adequate installation and heat dissipation space.

NOTICE
The specific numerical values for battery installation space can be adjusted based on the actual installation scenario and local regulations.

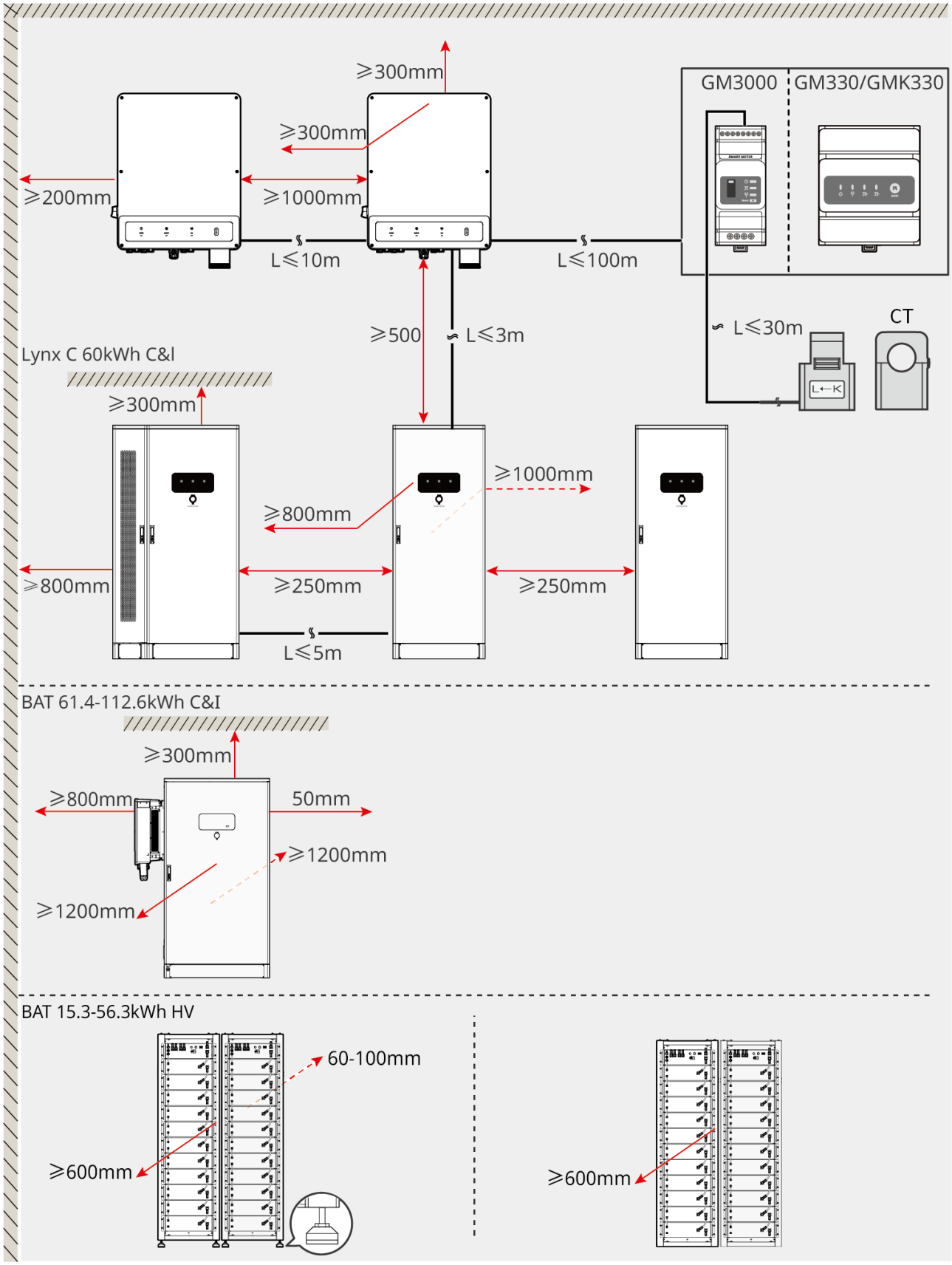

ET3010INT0008

4.2.4 Tool Requirements

NOTICE
During installation, it is recommended to use the following installation tools. If necessary, other auxiliary tools can be used on-site.

Installation Tools

Tool Type	Description	Tool Type	Description
	diagonal plier	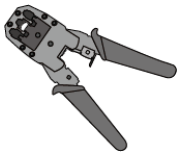	RJ45 connector crimping tool
	wire stripper	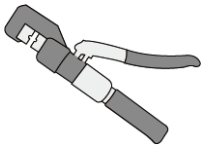	YQK-70 hydraulic pliers
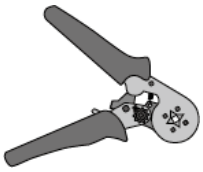	VXC9 hydraulic pliers		Level bar
	open-end wrench	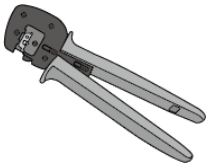	PV terminal crimping tool PV-CZM-61100
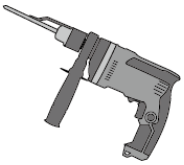	hammer drill (drill bit Φ8mm)	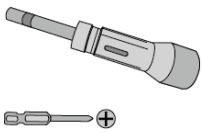	torque wrench M5/M6/M8/M12/M16/M18/M22
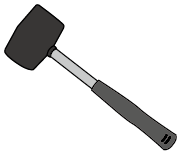	rubber hammer	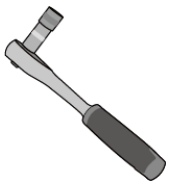	socket wrench

Tool Type	Description	Tool Type	Description
	marker pen	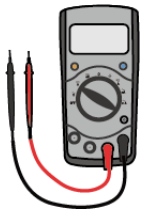	multimeter range ≤1100V
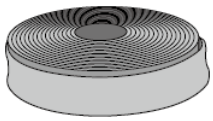	heat shrink tubing		heat gun
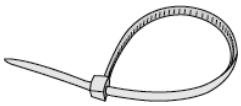	cable tie		vacuum cleaner
	Level bar		

Personal Protective Equipment

Tool Type	Description	Tool Type	Description
	Insulated gloves, protective gloves	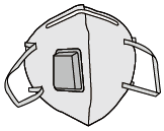	Dust mask
	Goggle		Safety shoes

4.3 Equipment Handling

⚠WARNING

1. When performing operations such as transportation, turnover, and installation, it must comply with the laws, regulations, and relevant standard requirements of the country or region.
2. Before installation, the equipment needs to be moved to the installation site. To avoid personal injury or equipment damage during the moving process, please note the following:
   - Please assign personnel according to the weight of the equipment to prevent the equipment from exceeding the weight range that can be manually carried, which could cause injury.
   - Please wear safety gloves to avoid injury.
   - Please ensure that the equipment remains balanced during the moving process to avoid dropping and tipping over.
   - During the moving process, please ensure that the cabinet doors are locked.

NOTICE

- The equipment can be transported to the installation site using hoisting or a forklift.
- When using hoisting to move the equipment, please use flexible slings or lifting belts, with a single belt's load-bearing capacity ≥2t.
- When using a forklift to move the equipment, the forklift's load-bearing capacity must be ≥2t.

- **Lynx C Series 60kWh Commercial & Industrial Battery System**

Forklift Transport Method One

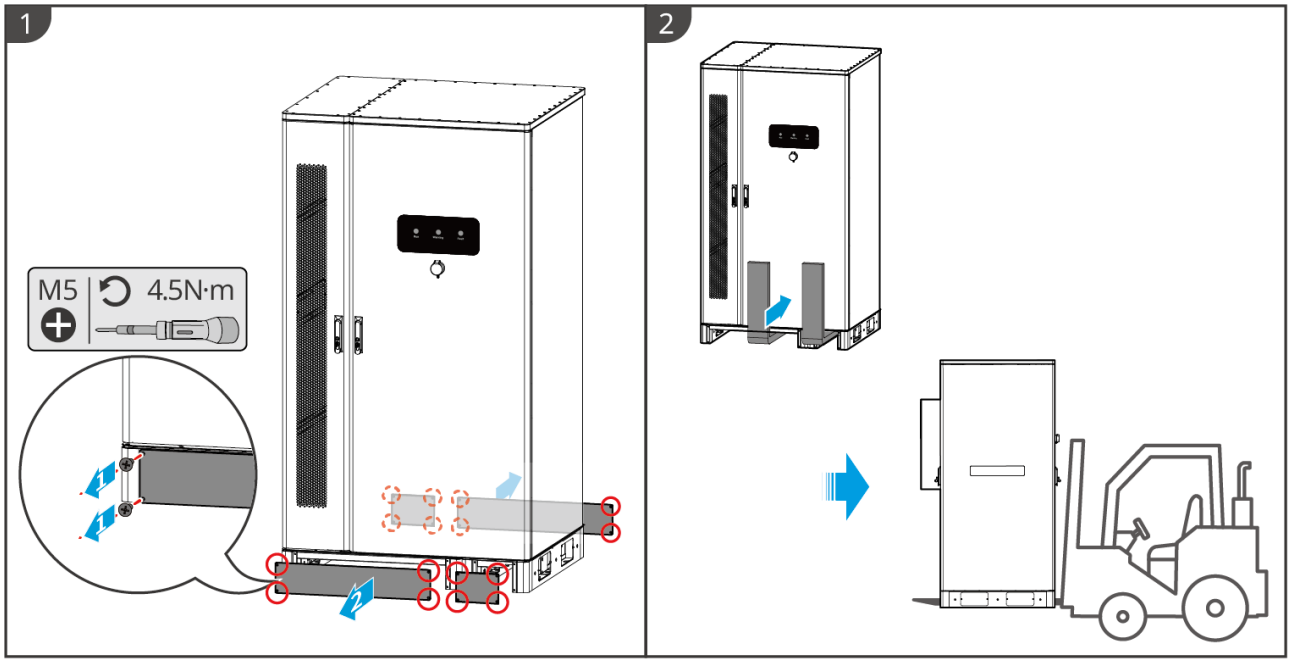

LXC6010INT0002

Forklift Transport Method Two

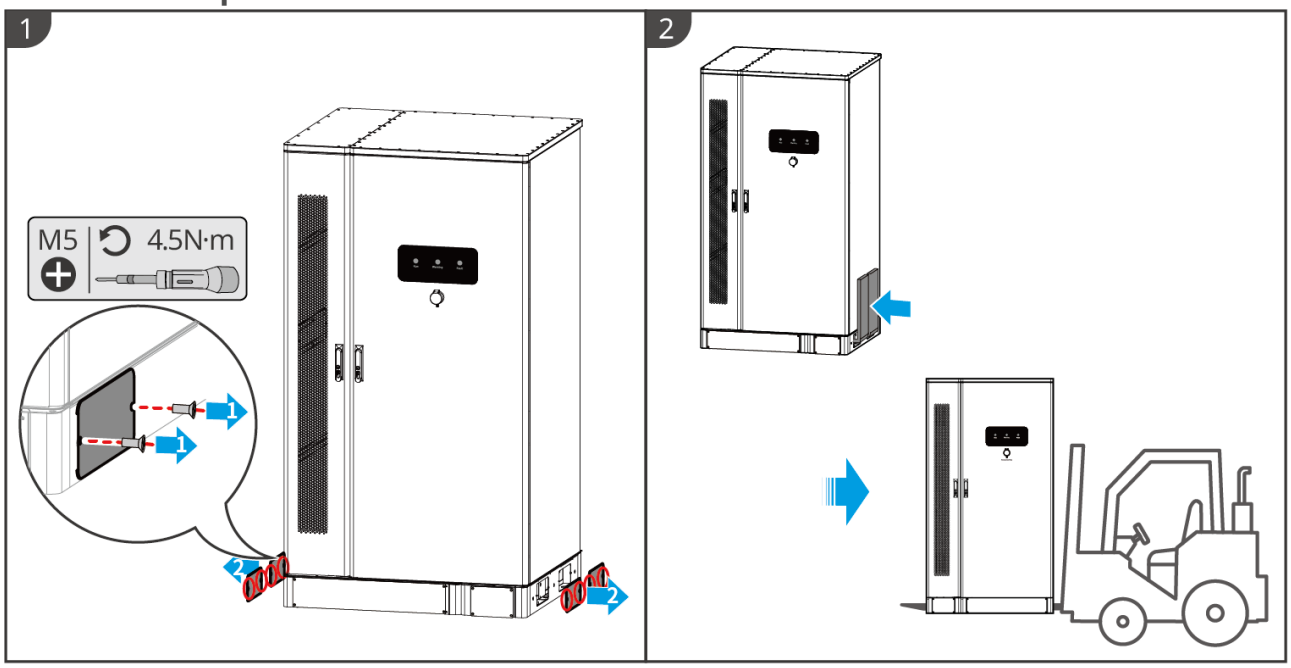

LXC6010INT0003

Hoisting Transport:

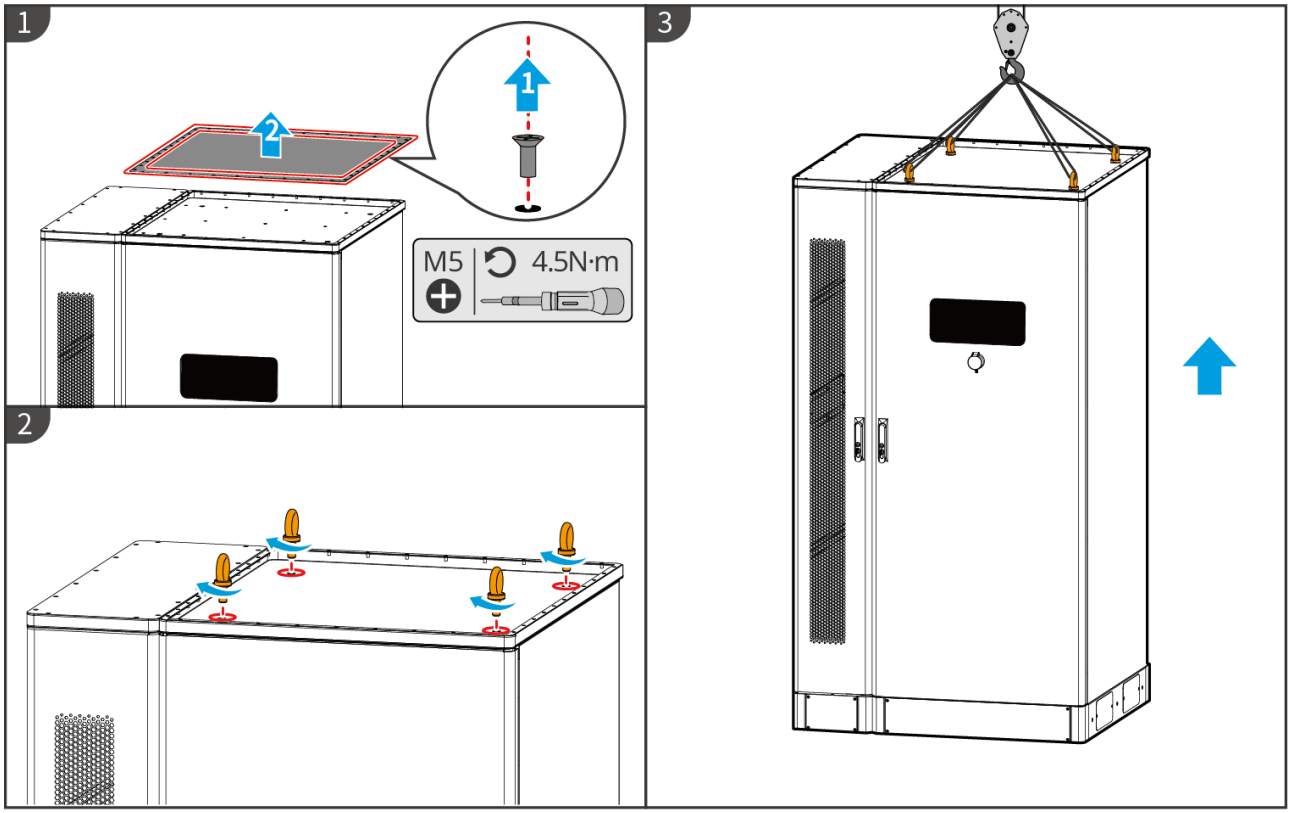

LXC6010INT0004

- **BAT-SSeries 15.3-56.3kWh High Voltage Battery**

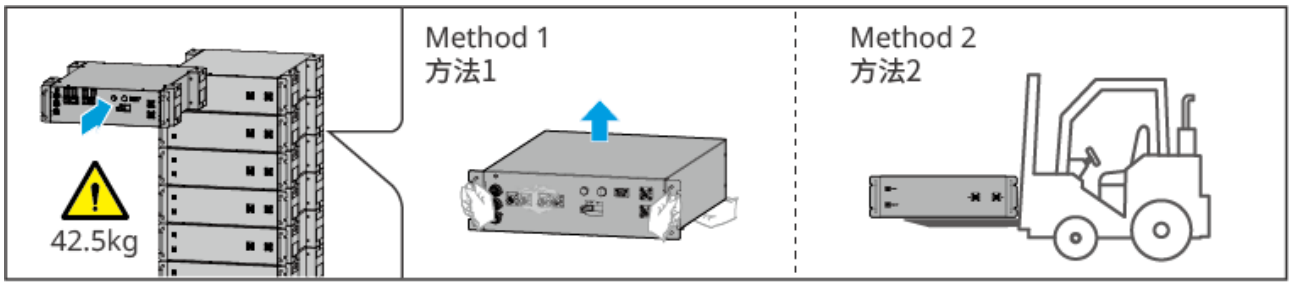

BAT10INT0032

- **BAT-CSeries 61.4-112.6kWh Commercial & Industrial Battery System**

NOTICE

- Remove the baffles before using a forklift to move the equipment.
- The battery system is secured to the pallet with bottom screws during shipment. Please remove the pallet before installation.

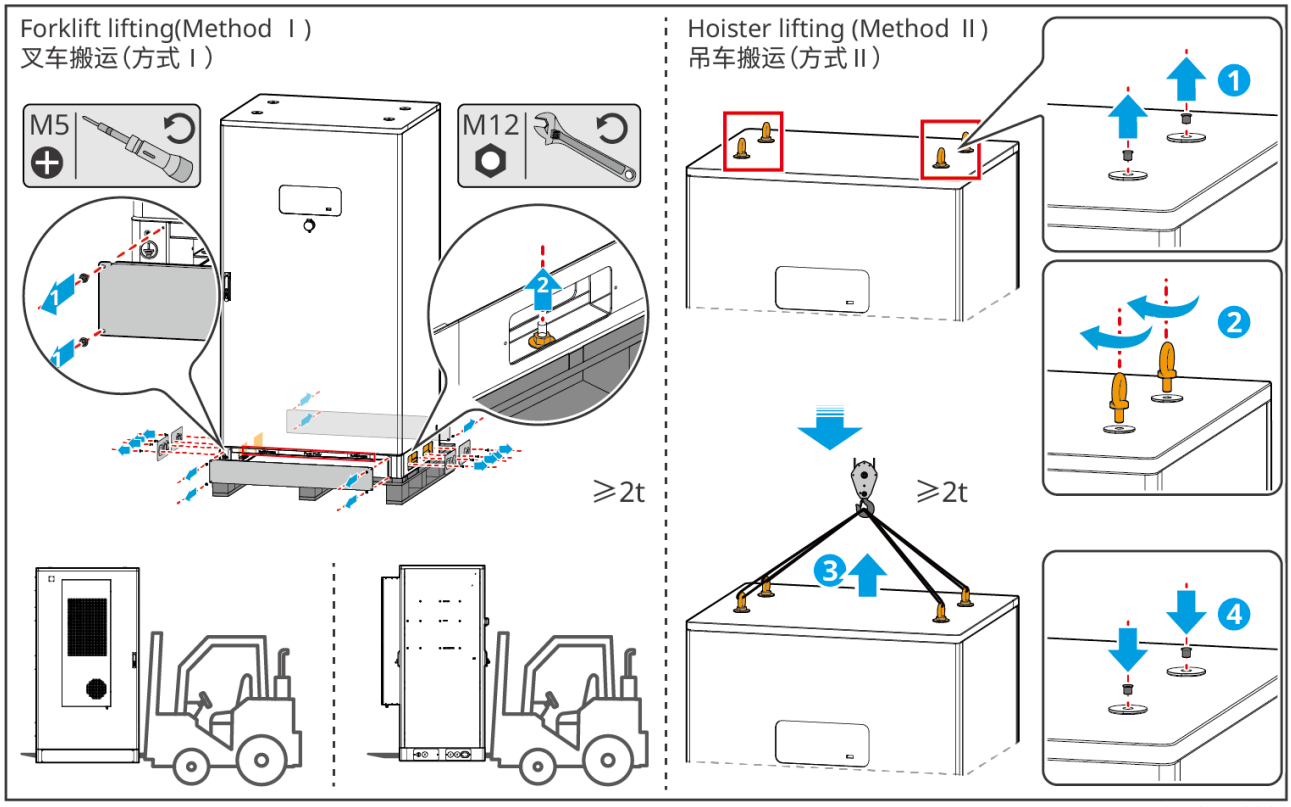

4.4 Installing the Inverter

Installing the Inverter in the Battery System Cabinet

⚠CAUTION
Ensure that the inverter is installed securely to prevent it from falling and injuring people.

1. Secure the inverter backplate bracket to the battery system cabinet.
2. (Optional) Use a DC switch lock to lock the DC switch in the “OFF” position, and hang the inverter on the backplate. The DC switch lock is user-provided; please ensure the aperture of the DC switch lock meets the requirements.
3. Tighten the screws on both sides to secure the backplate and inverter, ensuring the inverter is installed firmly.

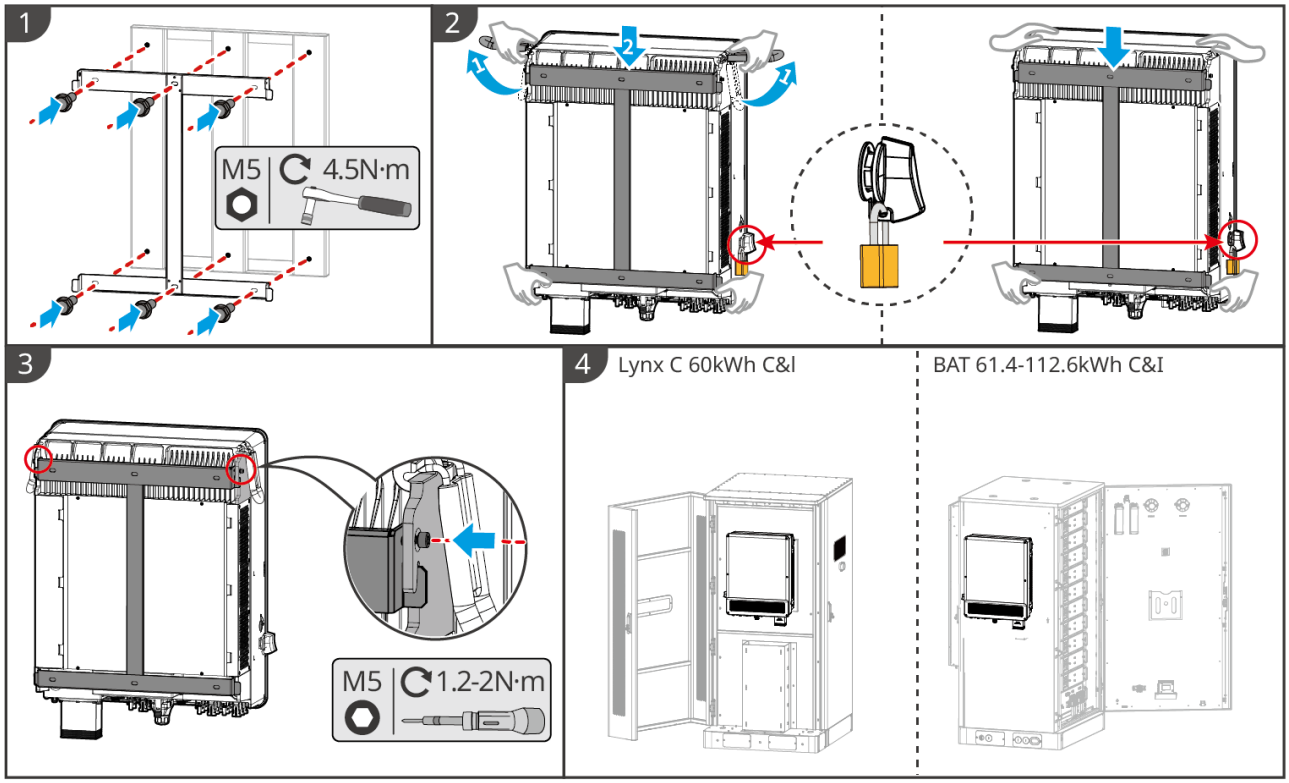

ET3010INT0006

Installing the Inverter on the Wall

⚠CAUTION

- When drilling holes, ensure the drilling location avoids water pipes, cables, etc., inside the wall to prevent danger.
- When drilling, please wear safety goggles and a dust mask to avoid inhaling dust into the respiratory tract or getting it in the eyes.
- Ensure the inverter is installed securely to prevent it from falling and injuring personnel.

1. Place the backplate horizontally on the wall, and use a marker to mark the drilling positions.
2. Use an impact drill to drill holes.
3. Use expansion screws to secure the inverter backplate bracket to the wall.
4. Use a DC switch lock to lock the DC switch in the “OFF” position, and hang the inverter on the backplate. (Optional) For Australia only, the DC switch lock is user-provided; please ensure the aperture of the DC switch lock meets the requirements.

5. (Optional) Lower the handle.
6. Tighten the screws on both sides to secure the backplate and inverter, ensuring the inverter is installed firmly.

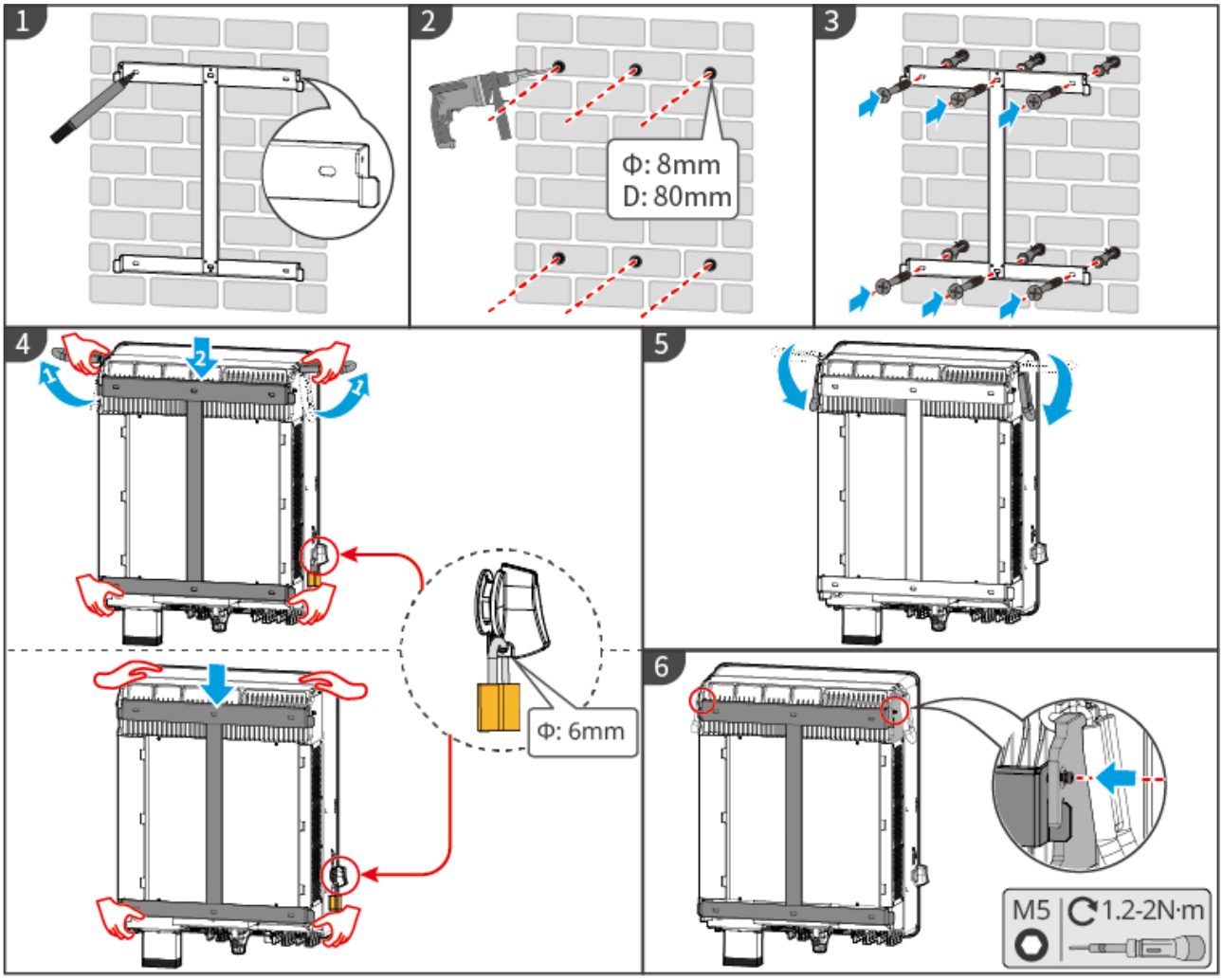

ET3010INT0002

Installing the Protective Cover (Australia Only)

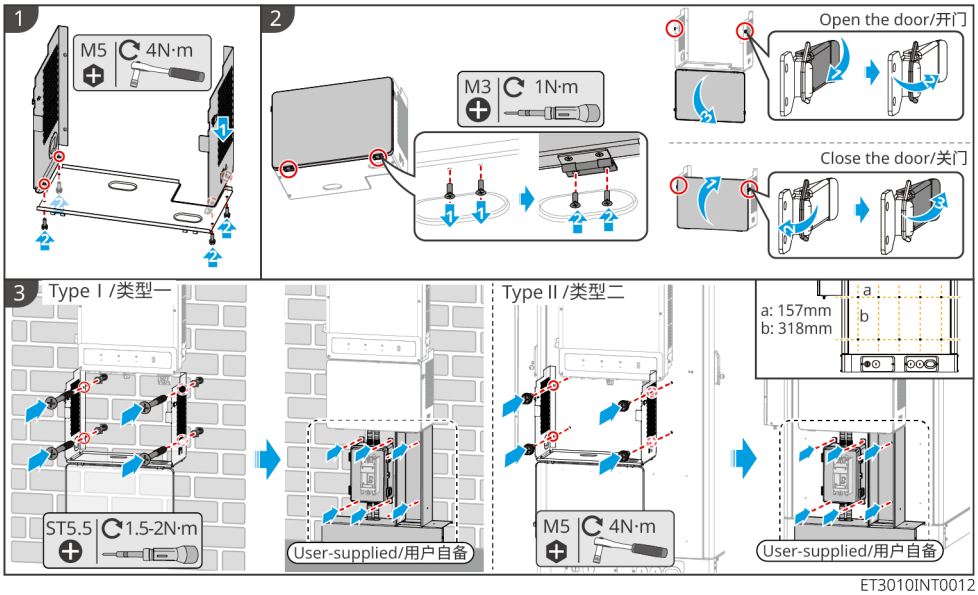

ET3010INT0012

Step1: Assemble the protective cover.

Step2: Install the front cover plate.

Step3: Secure the protective cover to the wall/side of the battery cabinet, and install the circuit breaker, waterproof box, and cable tray according to local regulations. For specific requirements, refer to the table below.

Equipment		Recommended Model/Specifications	Description
break er	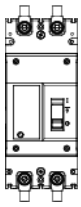	Select according to local laws and regulations • 2P DC switch • Rated Current ≥63A • Nominal Voltage ≥1000V	User to provide.

Equipment		Recommended Model/Specifications	Description
Water proof Box	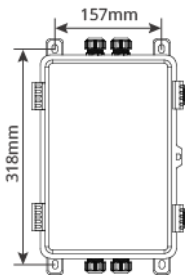	Waterproof rating > IP65 Hole spacing requirements: • Left-right hole spacing: 157mm • Up-down hole spacing: 318mm Style and dimensions are for reference only	User to provide. If the hole spacing of the waterproof box does not meet the requirements and cannot be fixed on the battery cabinet, please provide your own mounting plate. First, drill holes in the mounting plate according to the requirements and fix it on the battery cabinet, then fix the waterproof box on the mounting plate.
Cable Tray		a: 250mm b: 150mm c: 510mm Style for reference only	User to provide.

4.5 Installing the Battery System

WARNING

- Check that the ground is level and not sloped before installation.
- Ensure the energy storage system is vertical and flush against the ground, with no risk of tipping.

4.5.1 Open the Cabinet Door

⚠WARNING

- Do not open the cabinet door during handling and installation.
- Please close the cabinet door after system installation, wiring, and commissioning.

Step 1: Use the key to unlock the cabinet door.
Step 2: Turn the door handle to open the cabinet door.

- **Lynx C Series 60kWh Commercial & Industrial Battery System**

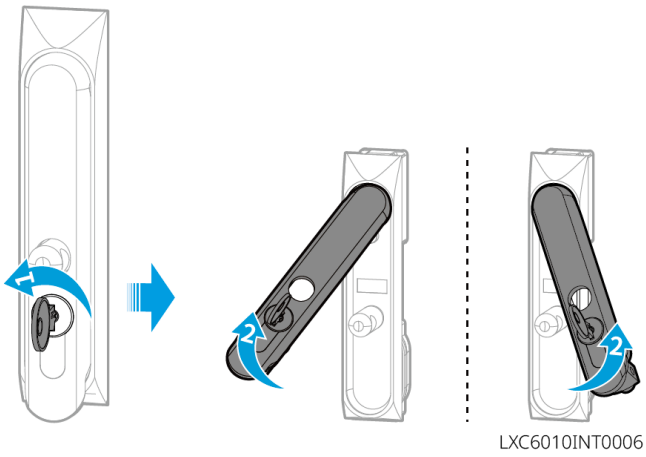

- **BAT Series 61.4-112.6kWh Commercial & Industrial Battery System**

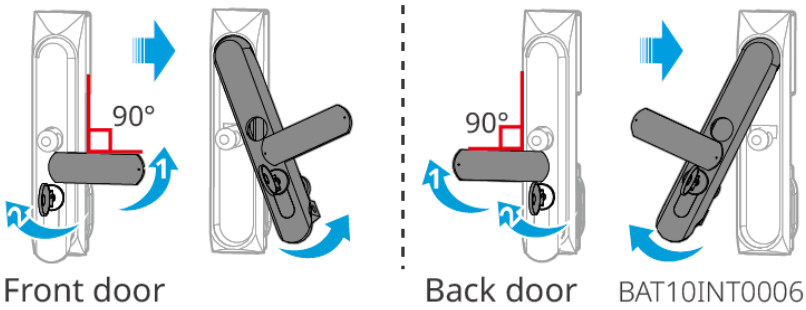

4.5.2 Installing the Lynx C Series 60kWh Commercial & Industrial Battery System

Step 1: Use a marker pen to mark the drilling positions on the level ground.
Step 2: Use an impact drill with a 14mm diameter drill bit to create holes

approximately 80mm deep, and install expansion bolts.
Step 3: Move the battery system to the hole positions and use a socket wrench to tighten the expansion bolts.

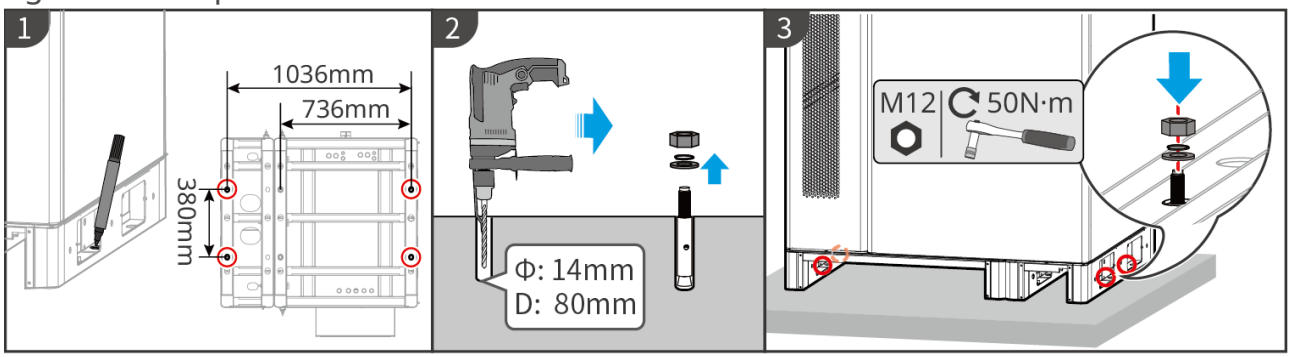

LXC6010INT0005

4.5.3 Installing BAT-S Series 15.3-56.3kWh High-Voltage Battery

• Stack Installation

Step 1: Install adjustable feet under the base. The adjustable height range is 35-45mm.
Step 2: Secure the floor-lock bracket onto the base.
Step 3: Use a pen to mark the drilling positions for expansion bolts on the floor.
Step 4: Install the expansion bolts.
Step 5: Secure the floor-lock bracket to the floor using the expansion bolts.
Step 6: Stack the battery PACKs. Pre-tighten the wall-lock brackets on the first and last battery PACK.
Step 7: Use a pen to mark the drilling positions for expansion bolts on the wall. Secure the wall-lock bracket with expansion bolts, then tighten the wall-lock bracket on the battery PACK.
Step 8: Place the high-voltage box.
Step 9: Install the equipotential bonding strap and the wire protection sleeve.

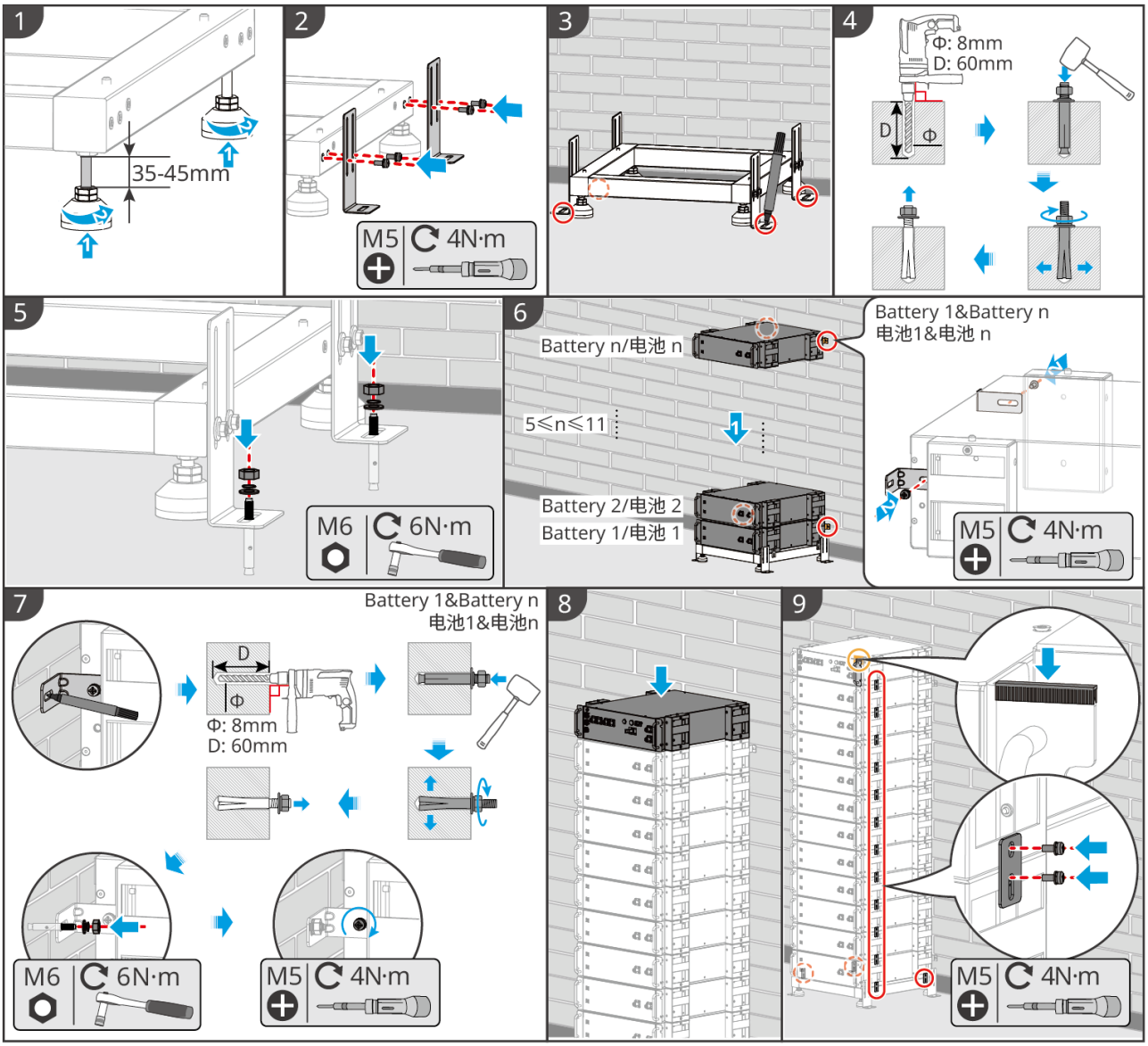

BAT10INT0021

• Battery Rack Installation

Installing the Battery Rack

Step1: Lay the bracket flat. Align all holes according to the serial number markings and secure them using M5 screws.
Step2: Position the rack vertically according to the arrow markings.

Securing the Battery Cabinet

◦ **Type I**

Step3: Use a marker to mark the drilling positions for expansion bolts on the level floor.
Step4: Install the expansion bolts and secure the battery rack to the level floor using them.

- **Type II**

Step3: Lay the rack horizontally and install adjustable feet on the bottom of the rack.
Step4: Position the rack vertically. Secure the rack to the wall using wall-lock brackets.

Installing the High-Voltage Box and Battery PACK

Step5: Slide the high-voltage box and battery PACKs into the rack in sequence, and attach the labels on the side of the rack.
Step6: Secure the high-voltage box and battery PACK using M5 screws.

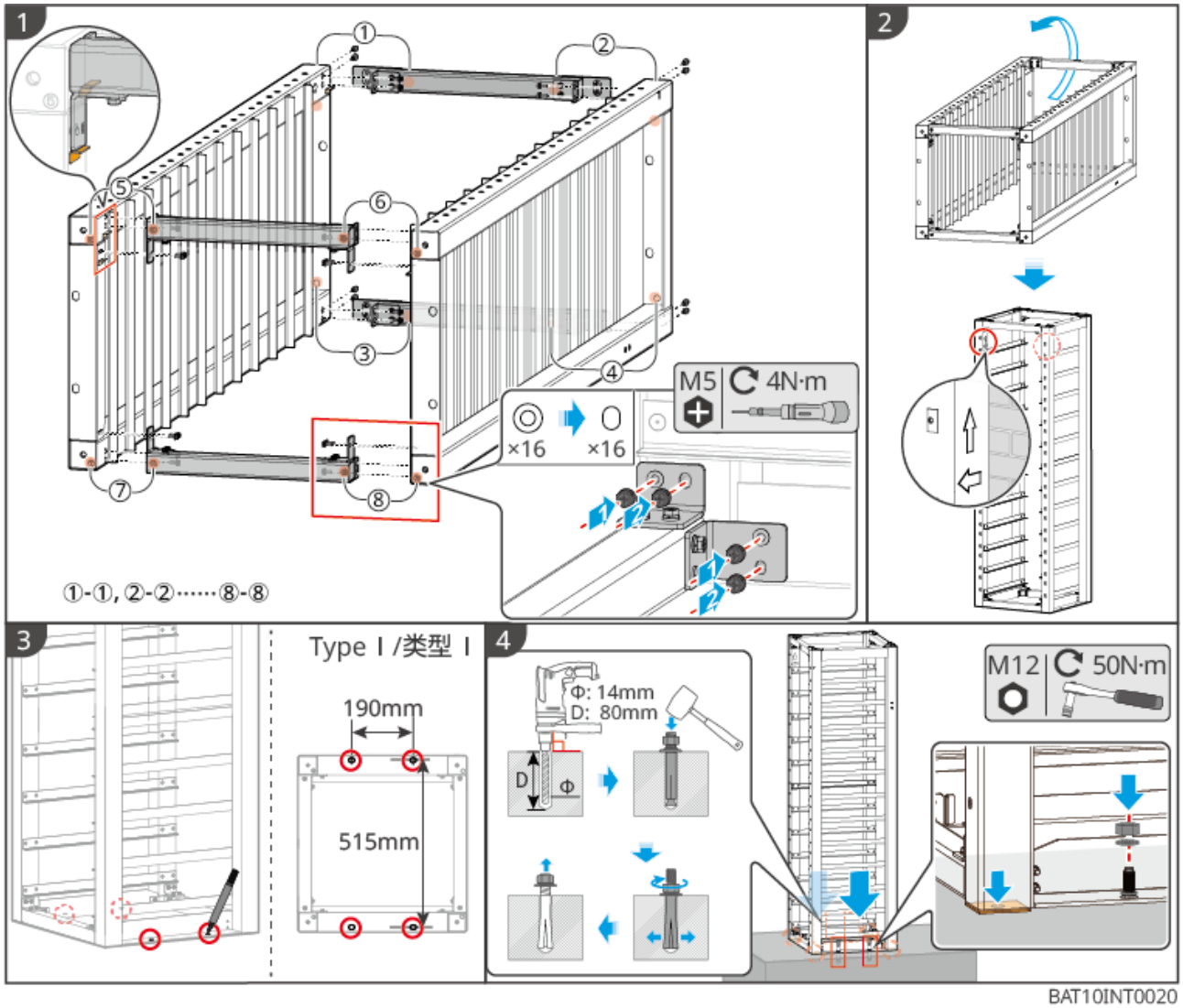
1
①-①, ②-②……⑧-⑧
M5
4N·m
×16
×16
2
3
Type I /类型 I
190mm
515mm
4
Φ: 14mm
D: 80mm
D
Φ
M12
50N·m
BAT10INT0020

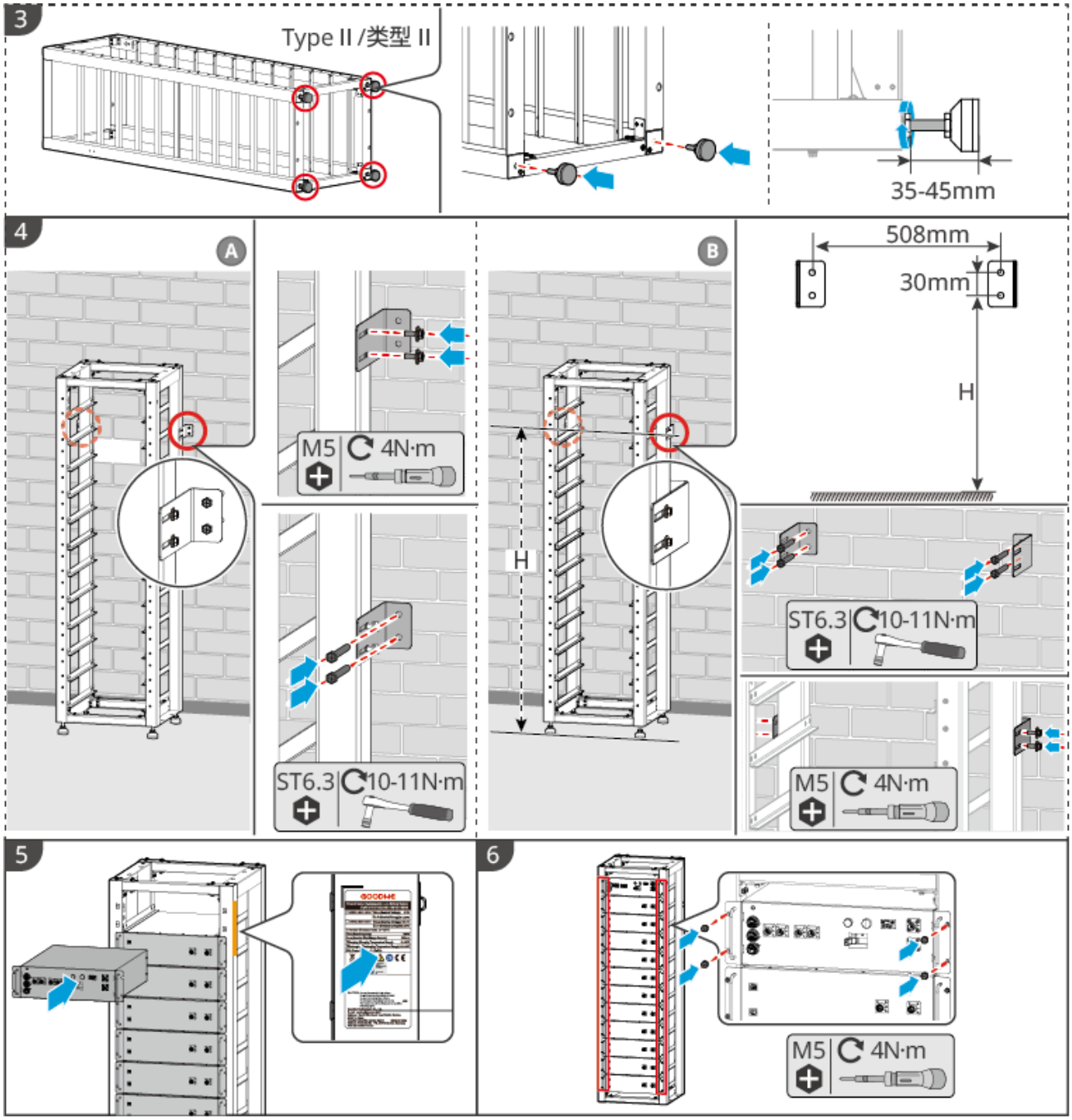

BAT10INT0031

4.5.4 Installing BAT Series 61.4-112.6kWh Commercial & Industrial Battery System

Step 1: Secure the battery system to the foundation.

1. Mark the drilling positions according to the dimensions shown in the diagram.
2. Use an impact drill to create the holes and install expansion bolts.

3. Move the battery rack to the hole positions and fasten the batteries to the foundation using the expansion bolts.

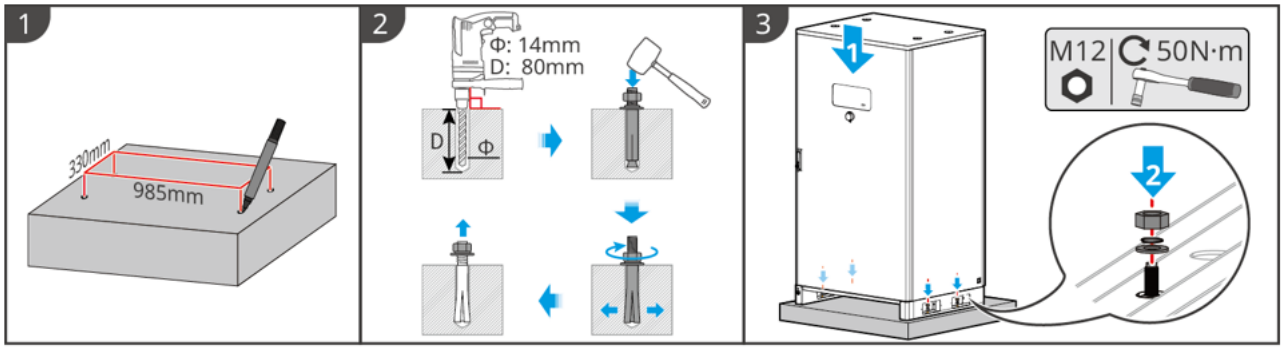

BAT10INT0005

Step 2: Remove the protective covers from the smoke and temperature sensor alarms. The smoke sensor and temperature sensor alarms are shipped with protective covers on the batteries. These covers must be removed for the alarms to function properly.

BAT10INT0016

Step 3: Install the air conditioning drain pipe.

1. Install the air conditioning drain pipe connector.
2. Secure the air conditioning drain pipe to the connector.

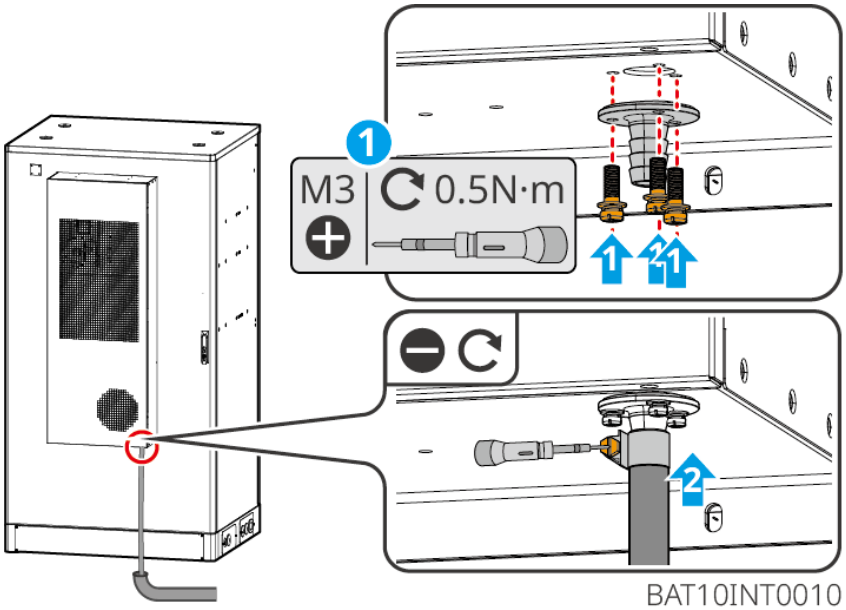

4.6 Installing the Smart Meter

⚠WARNING

In areas with lightning danger, if the meter cable length exceeds 10m and the cable is not laid using grounded metal conduits, it is recommended to install external lightning protection devices.

GM3000

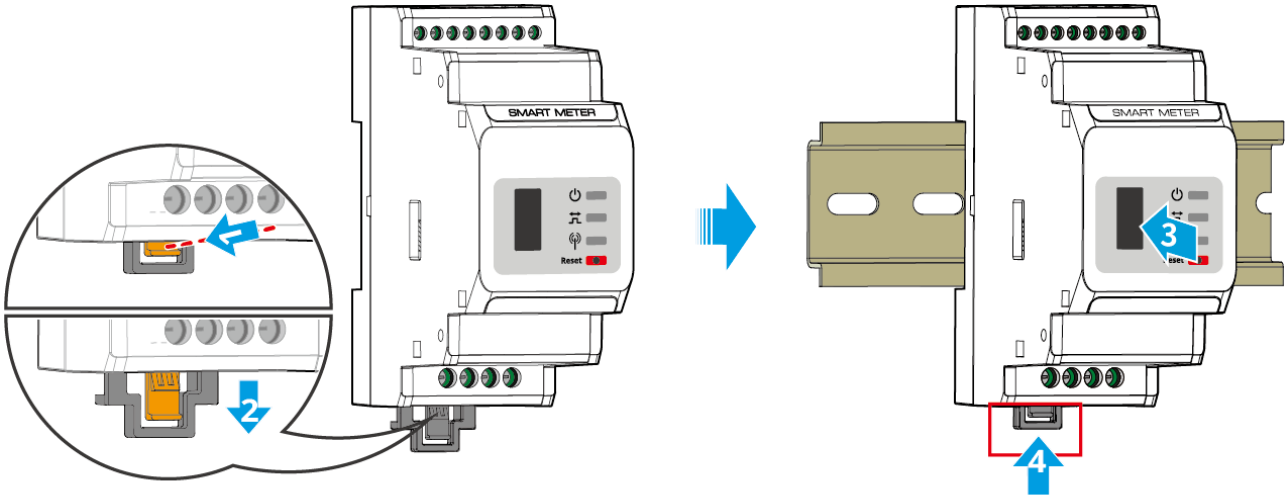

GM330&GMK330

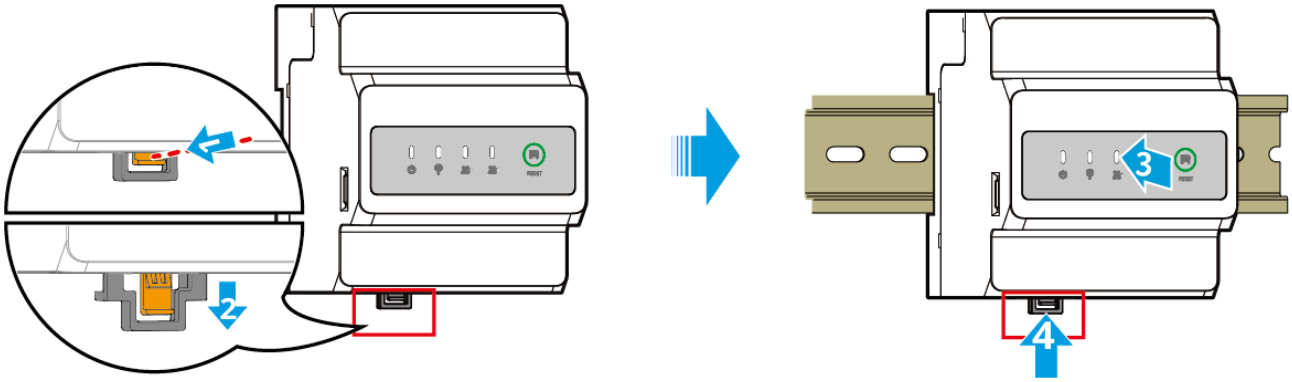

GMK10INT0003

5 System Wirings

⚠DANGER

- The erection, routing, and connection of cables must comply with local laws, regulations, and standard requirements.
- All operations during electrical connections, as well as the specifications of cables and components used, must meet local legal and regulatory requirements.
- Before performing electrical connections, please disconnect the device's DC switch and AC output switch to ensure the device is powered off. Live working is strictly prohibited, otherwise it may lead to DANGER such as electric shock.
- Cables of the same type should be bundled together and separated from cables of different types. It is prohibited to intertwine or cross-arrange them.
- If the cable is subjected to excessive tension, it may lead to poor connections. When connecting, please leave a certain length of cable slack before connecting it to the inverter's terminal ports.
- When crimping terminal lugs, ensure that the conductor part of the cable is in full contact with the terminal lug. Do not crimp the cable insulation together with the terminal lug. Otherwise, it may cause the device to fail to operate, or after operation, unreliable connections may lead to heating and damage to the inverter terminal block, among other conditions.

NOTICE

- When performing electrical connections, wear personal protective equipment such as safety shoes, protective gloves, and insulating gloves as required.
- Only qualified professionals are permitted to perform electrical connection operations.
- The cable colors in the diagrams of this document are for reference only. Specific cable specifications must comply with local regulatory requirements.
- For parallel systems, please adhere to the safety precautions in the user manuals corresponding to the related products within the system.

5.1 System Wiring Electrical Block Diagram

NOTICE

- Depending on regional regulatory requirements, the wiring methods for the N and PE lines of the inverter's ON-GRID and BACK-UP ports differ. Please comply with local regulations.
- The inverter's ON-GRID AC port has a built-in relay. When the inverter is in off-grid mode, the built-in ON-GRID relay is open; when the inverter is in grid-connected mode, the built-in ON-GRID relay is closed.
- When the inverter is powered on, the BACK-UP AC port is live. If maintenance on the BACK-UP Loads is required, please power down the inverter to avoid the risk of electric shock.

N and PE lines are connected together in the distribution box

NOTICE

- To maintain neutral integrity, the neutral wires on the grid-connected side and the off-grid side must be connected together; otherwise, the off-grid function cannot operate normally.
- The diagram below illustrates the grid system for regions such as Australia and New Zealand:

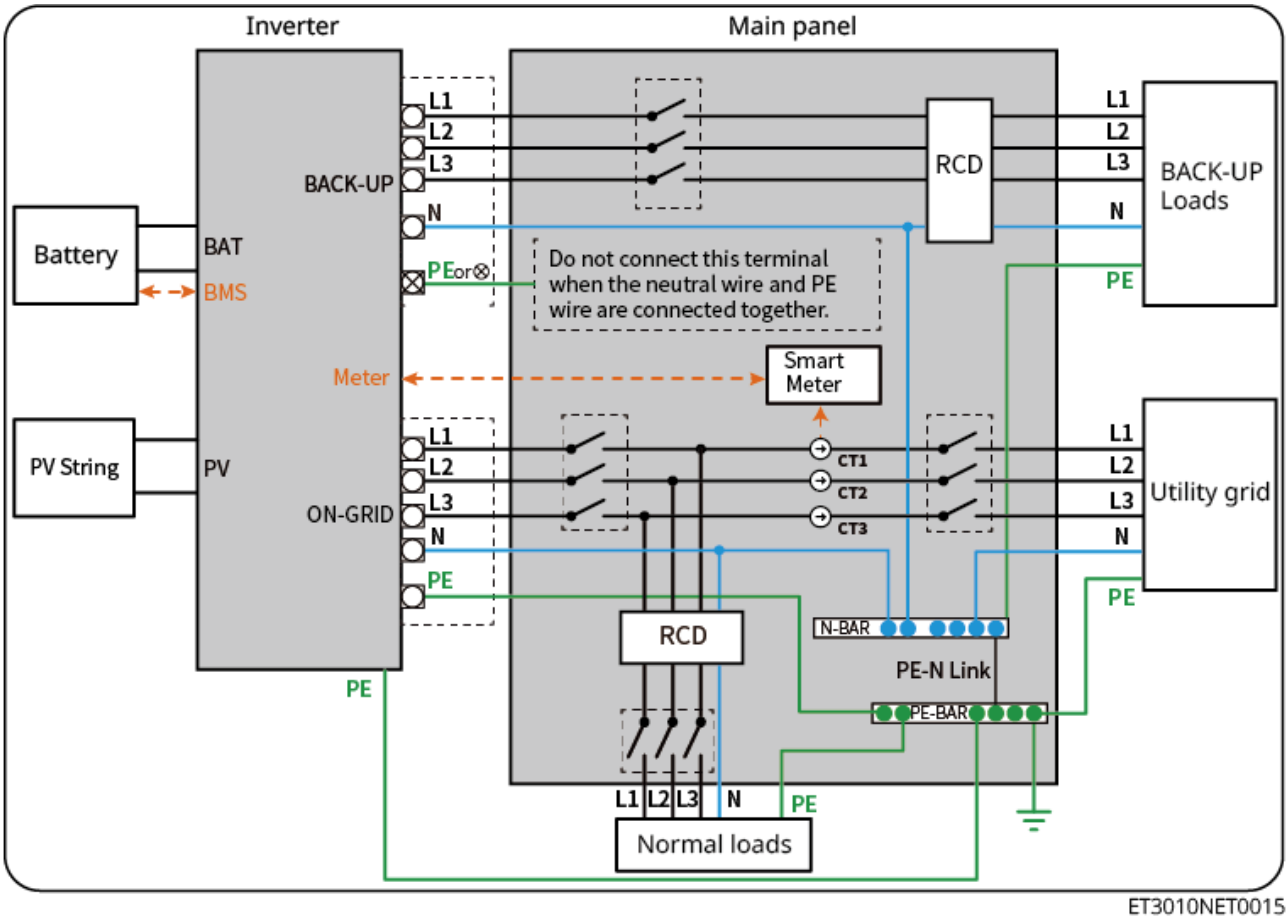

N and PE lines are separately wired in the distribution box

NOTICE

- Ensure the protective earth wire for BACK-UP is correctly and securely connected; otherwise, the BACK-UP function may operate abnormally in the event of a grid fault.
- The following wiring method applies to regions other than Australia, New Zealand, etc.:

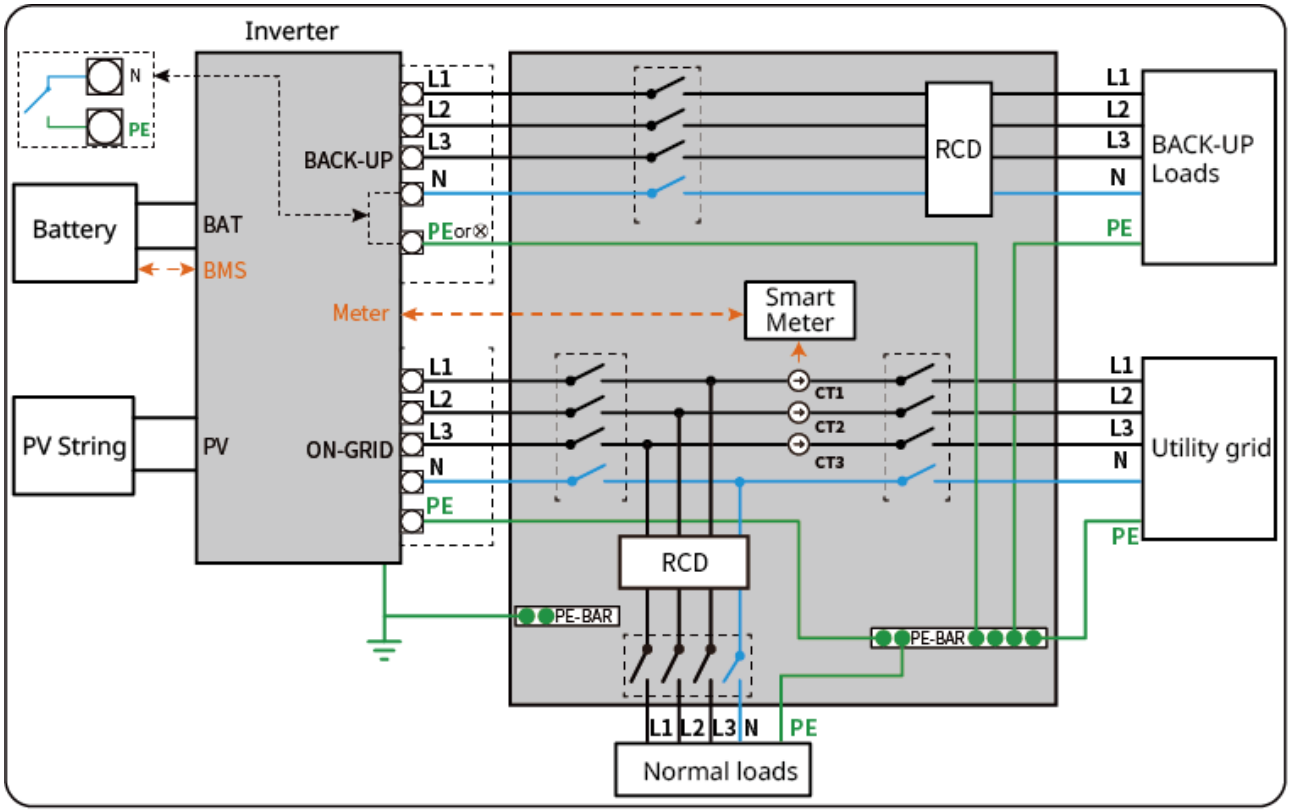

5.2 Detailed System Wiring Diagram

When all loads in the photovoltaic system cannot consume the electricity generated by the system, the surplus power will be fed back into the grid. In this case, a smart meter or CT can be used to monitor the system's power generation and control the amount of electricity fed into the grid.

- Connecting a smart meter enables the output power limit and load monitoring functions.
- After connecting the smart meter, please enable the "Export power limit" function via the SolarGo App.

The Detailed System Wiring Diagram only shows wiring examples using some model devices. Please refer to the corresponding wiring instruction chapters based on the actual devices used for wiring.

NOTICE

- In coupling scenarios, to implement grid-connected inverter power generation monitoring and load monitoring functions, dual-meter networking is required.
  - Meter 1 is used to monitor the system's grid-connected power.
  - Meter 2 is used to monitor the grid-connected inverter's power generation.
  - By integrating the data from Meter 1 and Meter 2, the monitoring platform can achieve real-time monitoring of load power consumption.
- If the grid-connected inverter requires output power limitation, please connect a meter or CT device separately.

Dual Meter Configuration Scenarios	
Meter 1 (Grid Side)	Meter 2 (Grid-tied Inverter AC Side)
GM3000	GM3000
GM3000	GM330
GM3000	GMK330
GM330	GM330
GM330	GM3000
GM330	GMK330
GMK330	GMK330
GMK330	GM3000
GMK330	GM330

Wiring diagram with protective cover (Australia only)

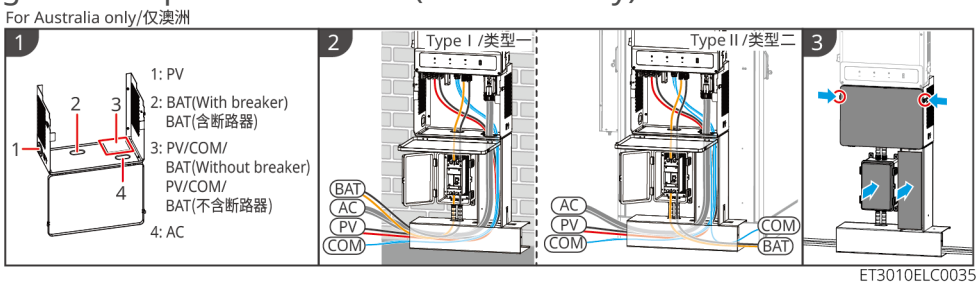

5.2.1 Detailed System Wiring Diagram for Single Inverter

General Scenarios

Scenario with GM3000

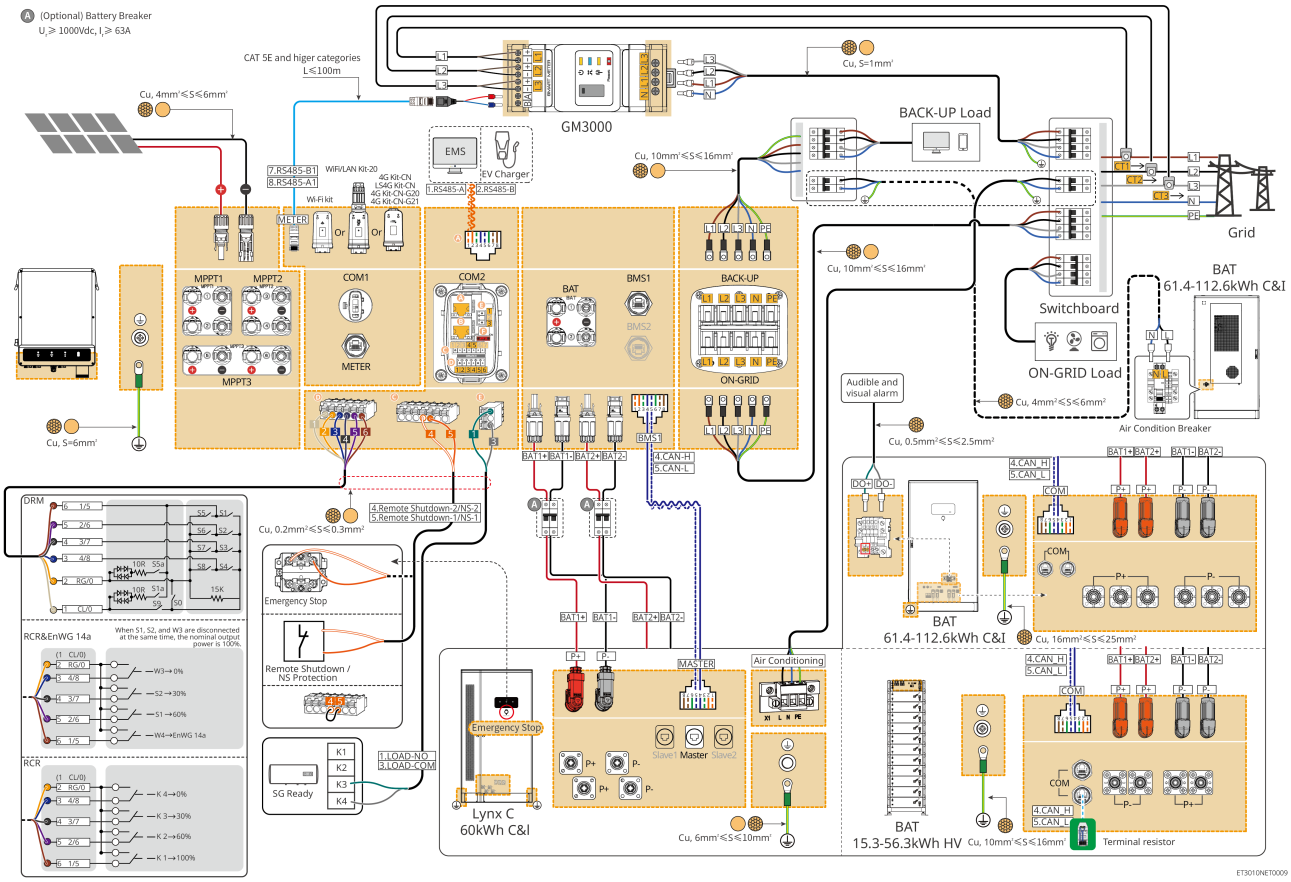

Scenario with GM330

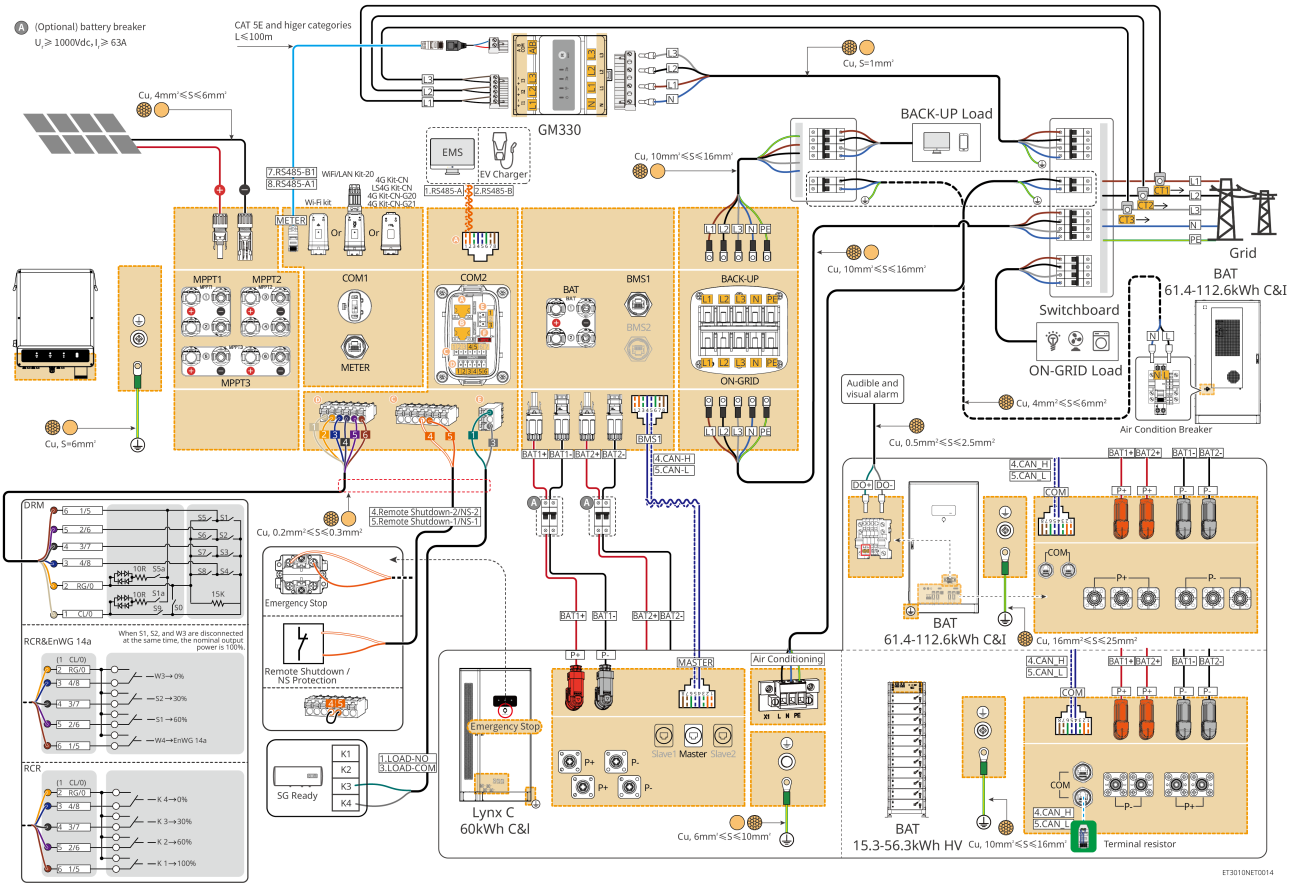

Scenario with GMK330

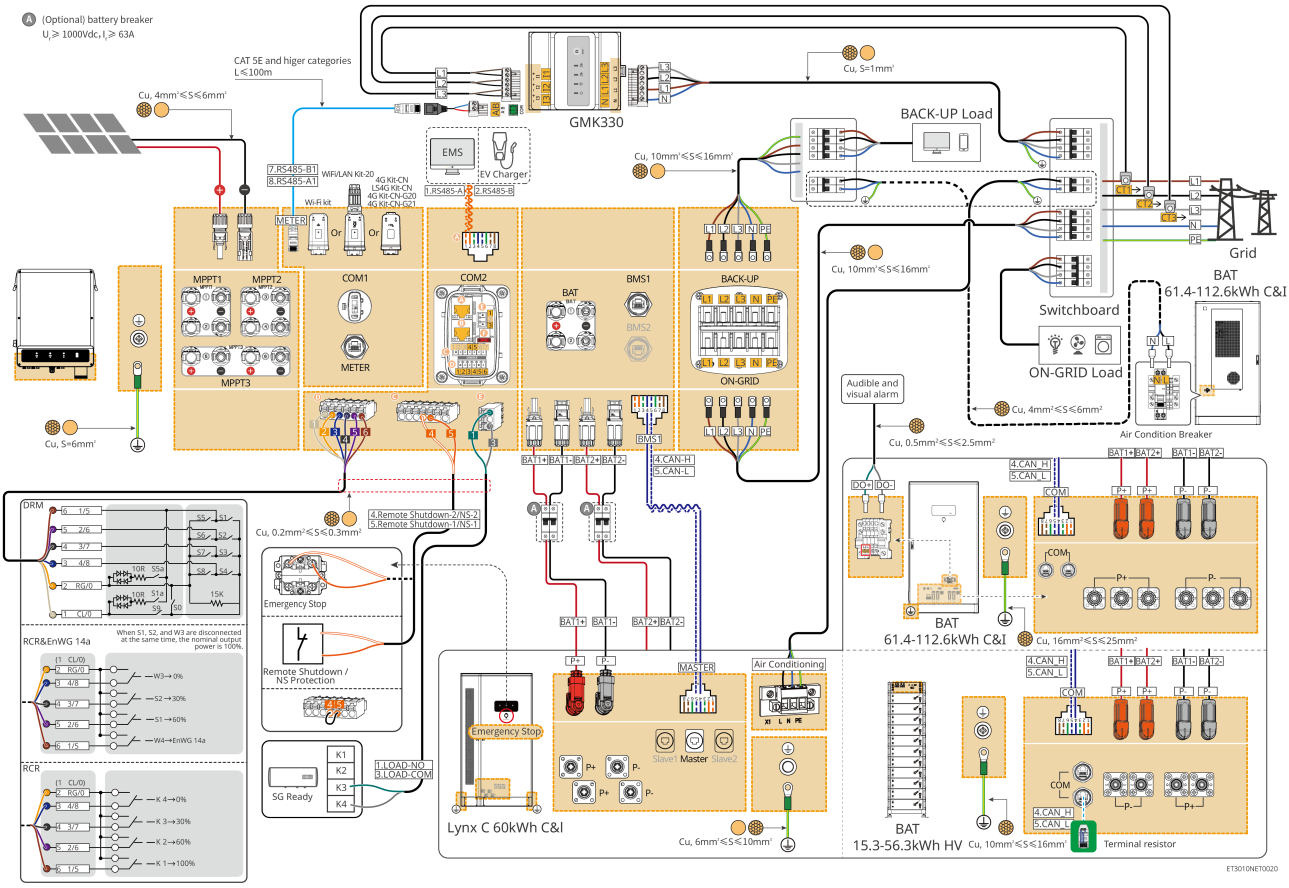

Grid-tied Inverter Power Generation Monitoring and Load Monitoring Networking Solution for Coupled Scenarios

For output power limitation in coupled scenarios, please connect meters or CTs separately for the grid-tied inverter.

GM330 meter + GM330 meter

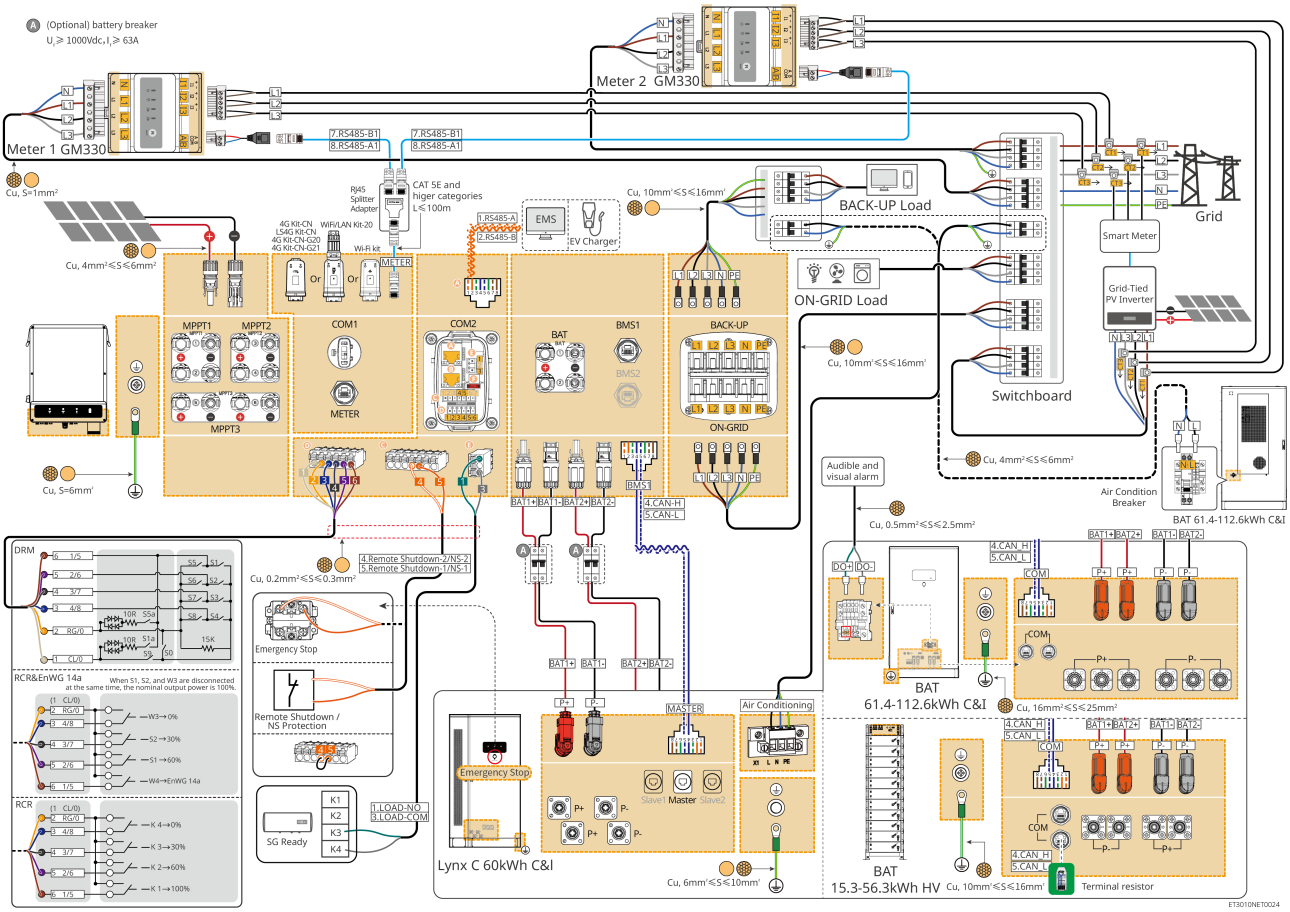

GMK330 meter + GMK330 meter

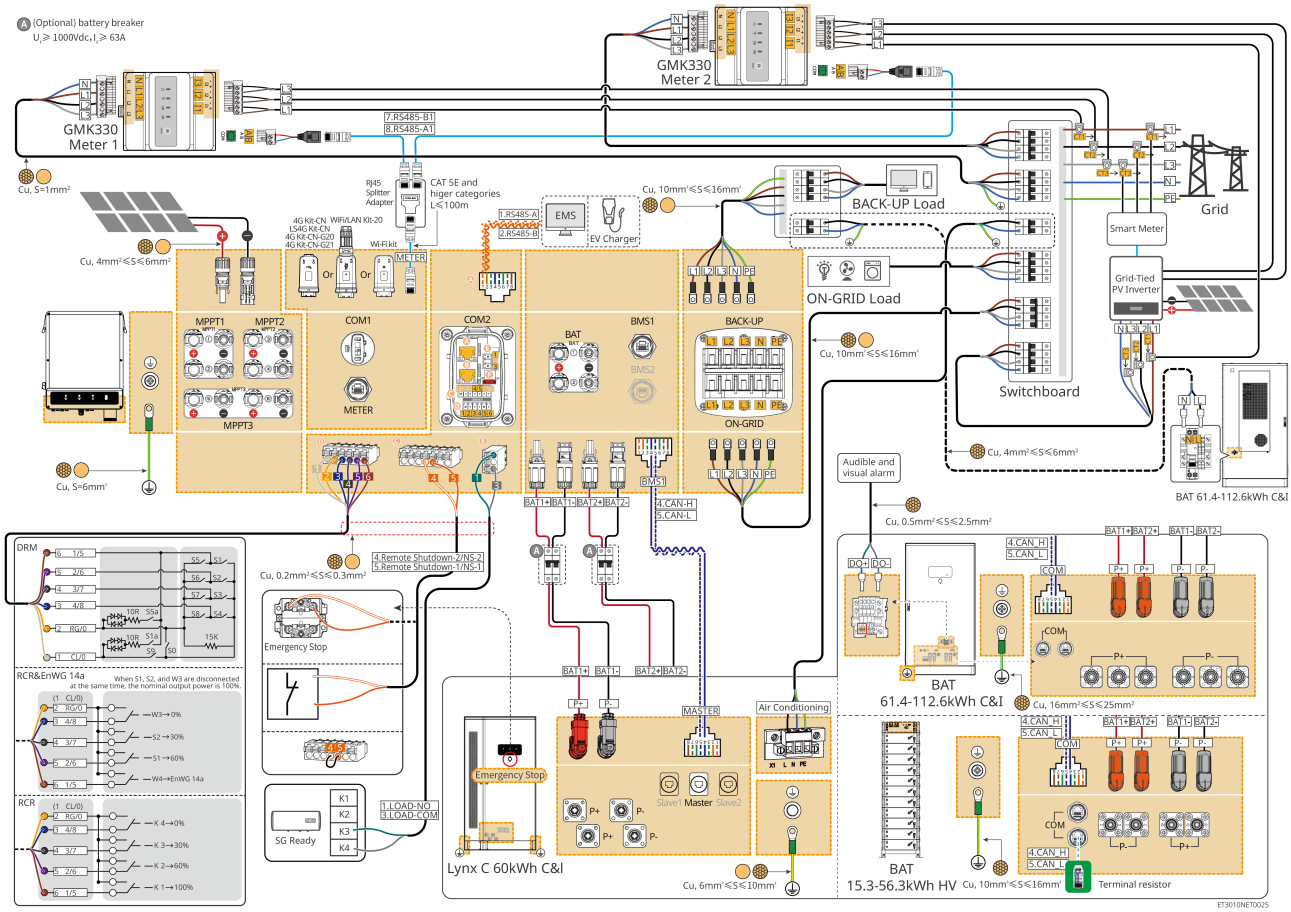

5.2.2 Detailed System Wiring Diagram for Parallel System

- In a parallel system scenario, the inverter connected to the Ezlink3000 smart communication stick and the meter is the master inverter, while others are slave inverters. In the system, do not connect the smart communication stick to slave inverters.
- If devices such as DRED, RCR, remote shutdown devices, NS Protection, SG Ready heat pumps, etc., need to be connected in the system, please connect them to the master inverter.
- The following diagrams focus on wiring related to parallel systems. For other port wiring requirements, please refer to the single-unit system.

WithGM3000Scenario

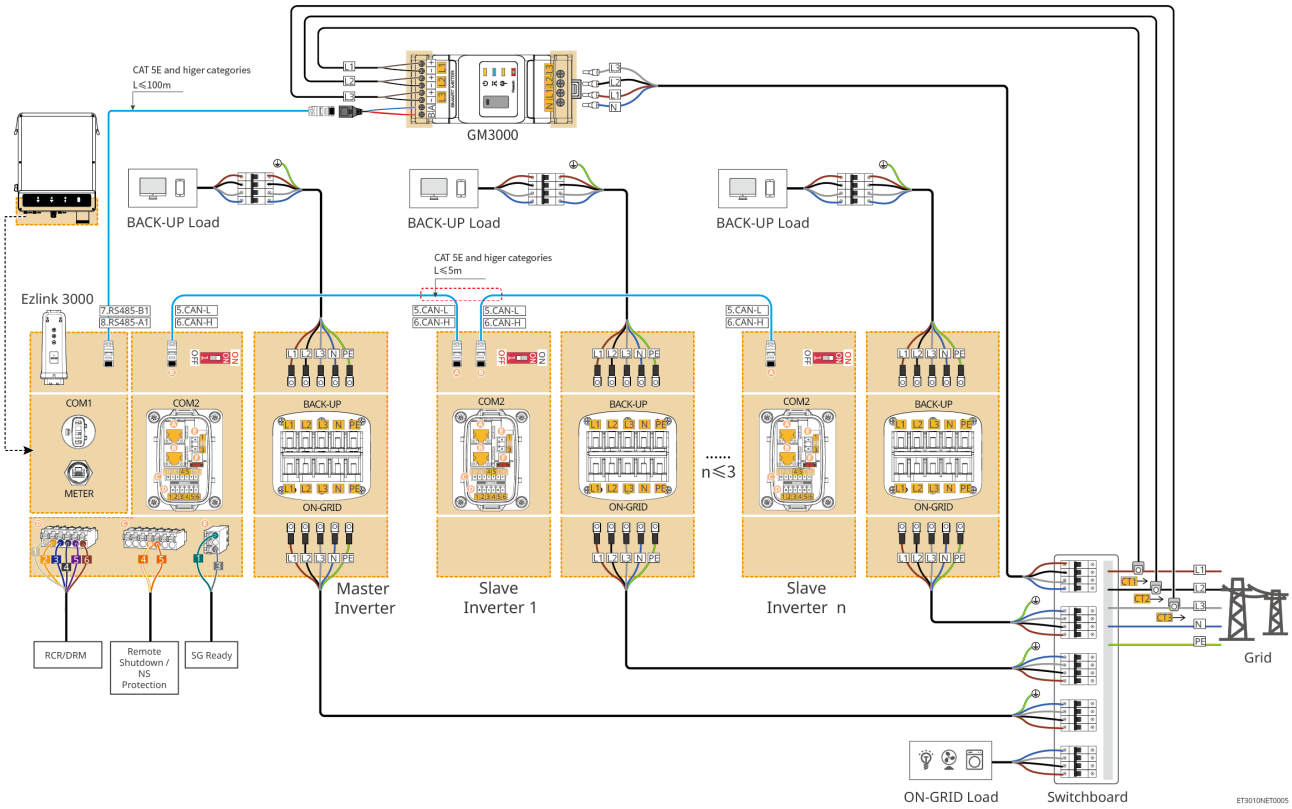

WithGM330Scenario

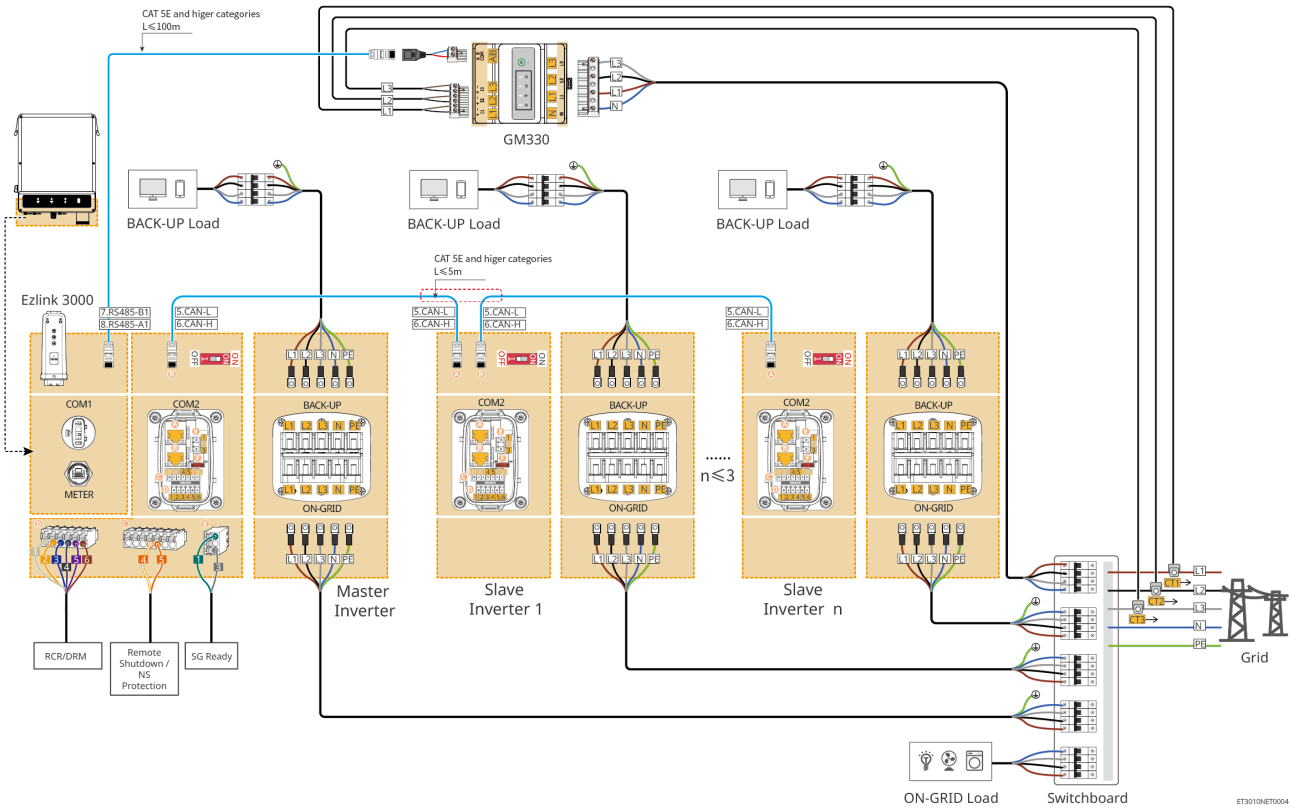

WithGMK330Scenario

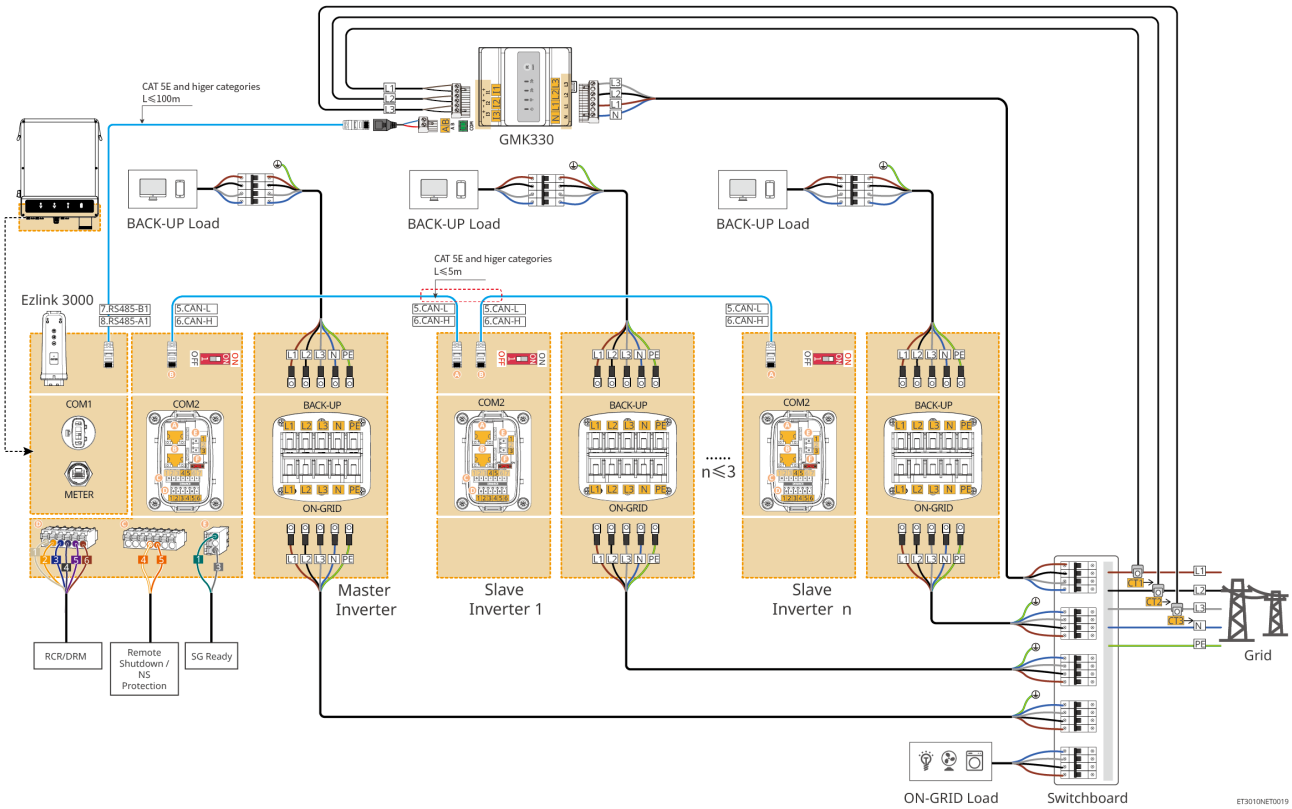

Coupling Scenario Load Monitoring and Grid-tied Inverter Power Generation Monitoring Networking Solution

GMK330 meter +GMK330 meter

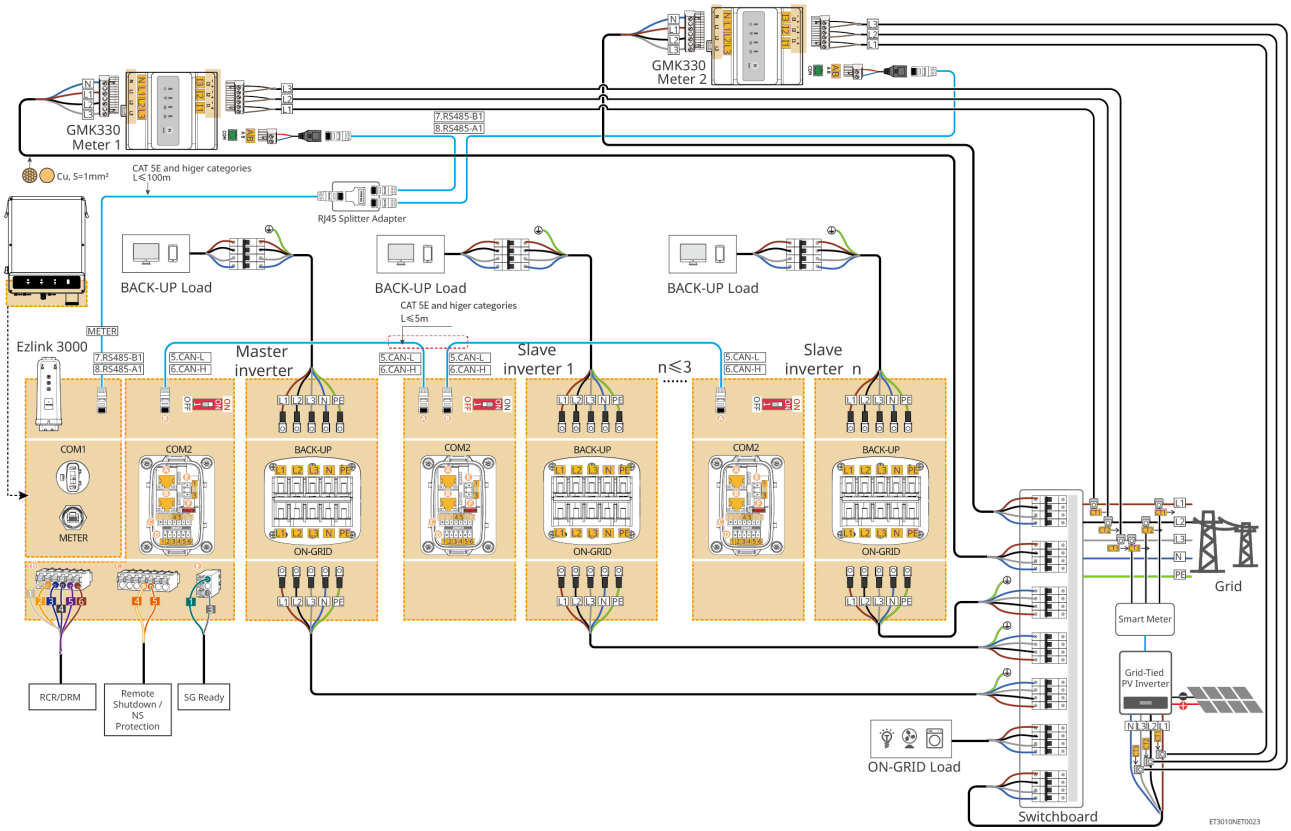

5.3 Preparing Materials

⚠WARNING

- Do not connect loads between the inverter and the AC switch directly connected to the inverter.
- Each inverter must be equipped with an AC output circuit breaker. Multiple inverters must not be connected to a single AC circuit breaker simultaneously.
- To ensure the inverter can be safely disconnected from the grid in case of an abnormality, please connect an AC circuit breaker on the AC side of the inverter. Select a suitable AC circuit breaker according to local regulations.
- When the inverter is powered on, the BACK-UP AC port is live. If maintenance is required on the BACK-UP Loads, power down the inverter first, otherwise electric shock may occur.
- For cables used within the same system, it is recommended that the following be consistent: conductor material, cross-sectional area, length, etc.
  - BACK-UP AC cable for each inverter
  - ON-GRID AC cable for each inverter
  - Power cable between the inverter and the battery
  - Power cable between batteries
- The system only supports connecting a generator via an ATS switch in a single-unit scenario to achieve switching between grid and generator power supply. The ATS switch is connected to the grid by default.

5.3.1 Preparing Breakers

No.	breaker	Recommended Specifications	Acquisition Method	Remarks
1	ON-GRID breaker	When the BACK-UP port is not loaded, the Rated Current requirements are as follows: • GW15K-ET: Rated Current ≥32A; Nominal Voltage ≥400V • GW20K-ET: Rated Current ≥40A; Nominal Voltage ≥400V • GW25K-ET: Rated Current ≥50A; Nominal Voltage ≥400V • GW29.9K-ET, GW30K-ET: Rated Current ≥63A; Nominal Voltage ≥400V • GW12KL-ET: Rated Current ≥50A; Nominal Voltage ≥230V • GW18KL-ET: Rated Current ≥63A; Nominal Voltage ≥230V	Self-provided	If the inverter's BACK-UP port is not used, a suitable breaker can be selected based on the AC maximum output current.
		When the BACK-UP port is loaded, the Rated Current requirements are as follows: • GW15K-ET: Rated Current ≥50A; Nominal Voltage ≥400V • GW20K-ET, GW25K-ET, GW29.9K-ET, GW30K-ET: Rated Current ≥63A; Nominal Voltage ≥400V • GW12KL-ET, GW18KL-ET: Rated Current ≥63A; Nominal Voltage ≥230V		

No.	breaker	Recommended Specifications	Acquisition Method	Remarks
2	BACK-UP breaker	Nominal Voltage ≥400V, Rated Current requirements are as follows: • GW15K-ET: Rated Current ≥32A; Nominal Voltage ≥400V • GW20K-ET: Rated Current ≥40A; Nominal Voltage ≥400V • GW25K-ET: Rated Current ≥50A; Nominal Voltage ≥400V • GW29.9K-ET, GW30K-ET: Rated Current ≥63A; Nominal Voltage ≥400V • GW12KL-ET: Rated Current ≥40A; Nominal Voltage ≥230V • GW18KL-ET: Rated Current ≥63A; Nominal Voltage ≥230V	Self-provided	-

No.	breaker	Recommended Specifications	Acquisition Method	Remarks
3	ATS Switch	The ATS switch for the same model has the same specifications as the ON-GRID breaker. Specification requirements (recommended): • GW15K-ET: Rated Current ≥32A; • GW20K-ET: Rated Current ≥40A; • GW25K-ET: Rated Current ≥50A; • GW29.9K-ET, GW30K-ET: Rated Current ≥63A; • GW12KL-ET: Rated Current ≥40A; • GW18KL-ET: Rated Current ≥63A;	Self-provided	During actual selection, you can also choose a breaker that complies with local installation regulations based on the actual operating current.
4	Battery Switch	Select according to local laws and regulations • 2P DC Switch • Rated Current ≥63A • Nominal Voltage ≥1000V	Self-provided	-

No.	breaker	Recommended Specifications	Acquisition Method	Remarks
5	RCD	Select according to local laws and regulations • Type A type • ON-GRID side: 300mA • BACK-UP side: 30mA	Self-provided	-
6	Meter Switch	• Nominal Voltage: 380V/400V • Rated Current: 0.5A	Self-provided	-

5.3.2 Preparing Cables

No.	Cable	Recommended Specifications	Acquisition Method
1	Inverter Protective Grounding Cable	• Single-core outdoor copper cable • Conductor cross-sectional area: 6mm²-10mm²	Customer-supplied
2	Battery Protective Grounding Cable Lynx C Series 60kWh Commercial & Industrial Battery System	• Single-core outdoor copper cable • Conductor cross-sectional area: 6mm²	Customer-supplied
	Battery Protective Grounding Cable BAT-S Series 15.3-56.3kWh High Voltage Battery	• Single-core outdoor copper cable • Conductor cross-sectional area: 10-16mm²	

No.	Cable	Recommended Specifications	Acquisition Method
	Battery Protective Grounding Cable BAT-C Series 61.4-112.6kWh Commercial & Industrial Battery System	• Single-core outdoor copper cable • Conductor cross-sectional area: 16-25mm²	
3	PV DC Cable	• Industry-standard outdoor PV cable • Conductor cross-sectional area: 4mm²-6mm² • Cable outer diameter: 5.9mm-8.8mm	Customer-supplied
4	Battery DC Cable	Terminal TypeI 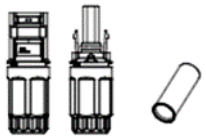 • Single-core outdoor copper cable • Conductor cross-sectional area: 10mm² • Cable outer diameter: 6.5mm-9.5mm	Included/ Customer-supplied
		Terminal Type Ⅱ 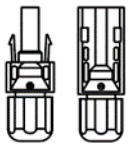 • Single-core outdoor copper cable • Conductor cross-sectional area: 10mm² • Cable outer diameter: 5mm-8.5mm	

No.	Cable	Recommended Specifications	Acquisition Method
5	Battery Cluster Power Cable Lynx C Series 60kWh Commercial & Industrial Battery System	• Single-core outdoor copper cable • Conductor cross-sectional area: 32mm²-35mm² • Cable outer diameter: 10mm-12mm	Customer-supplied
	Battery Cluster Power Cable BAT-S Series 15.3-56.3kWh High Voltage Battery	• Single-core outdoor copper cable • Conductor cross-sectional area: 25mm² • Cable outer diameter: 9mm-11mm	Customer-supplied
6	AC Cable	• Multi-core outdoor copper cable • Conductor cross-sectional area: 10mm²-16mm² • Cable outer diameter: 21mm-26mm	Customer-supplied
7	Smart Meter Power Cable	Outdoor copper cable Conductor cross-sectional area: 1mm²	Customer-supplied
8	BatteryBMS Communication cable	-	Included
9	MeterRS485 Communication cable	-	RJ45-2PIN terminal adapter cable and standard Ethernet cable, Included
10	Battery Cluster Communication cable	CAT 5E or higher standard Ethernet cable and RJ45 connector	Customer-supplied

No.	Cable	Recommended Specifications	Acquisition Method
11	load controlDO Communication cable	• Shielded cable meeting local standards • Conductor cross-sectional area: 0.2mm²-0.3mm² • Cable outer diameter: 5mm-8mm	Customer-supplied
12	Remote Shutdown Communication cable		Customer-supplied
13	RCR/DRED Signal Cable		Customer-supplied
14	Inverter Parallel Communication Cable	CAT 5E or higher standard Ethernet cable and RJ45 connector	Customer-supplied
15	EMS Communication cable/Charging Pile Communication cable	CAT 5E or higher standard Ethernet cable and RJ45 connector	Customer-supplied
16	12V External Power Supply	• Outdoor copper cable • Conductor cross-sectional area: 0.2mm²-0.3mm² • Cable outer diameter: 5mm-8mm	Customer-supplied
17	Air Conditioner Power Cable Lynx C Series 60kWh Commercial & Industrial Battery System	-	Pre-installed
	Air Conditioner Power Cable BAT-C Series 61.4-112.6kWh Commercial & Industrial Battery System	-	Included

5.3.3 Removing the Baffle

⚠WARNING

- Remove the baffle after the system installation is complete and before starting wiring.
- After completing the system wiring, install the baffle to the enclosure.

Remove the bottom baffle

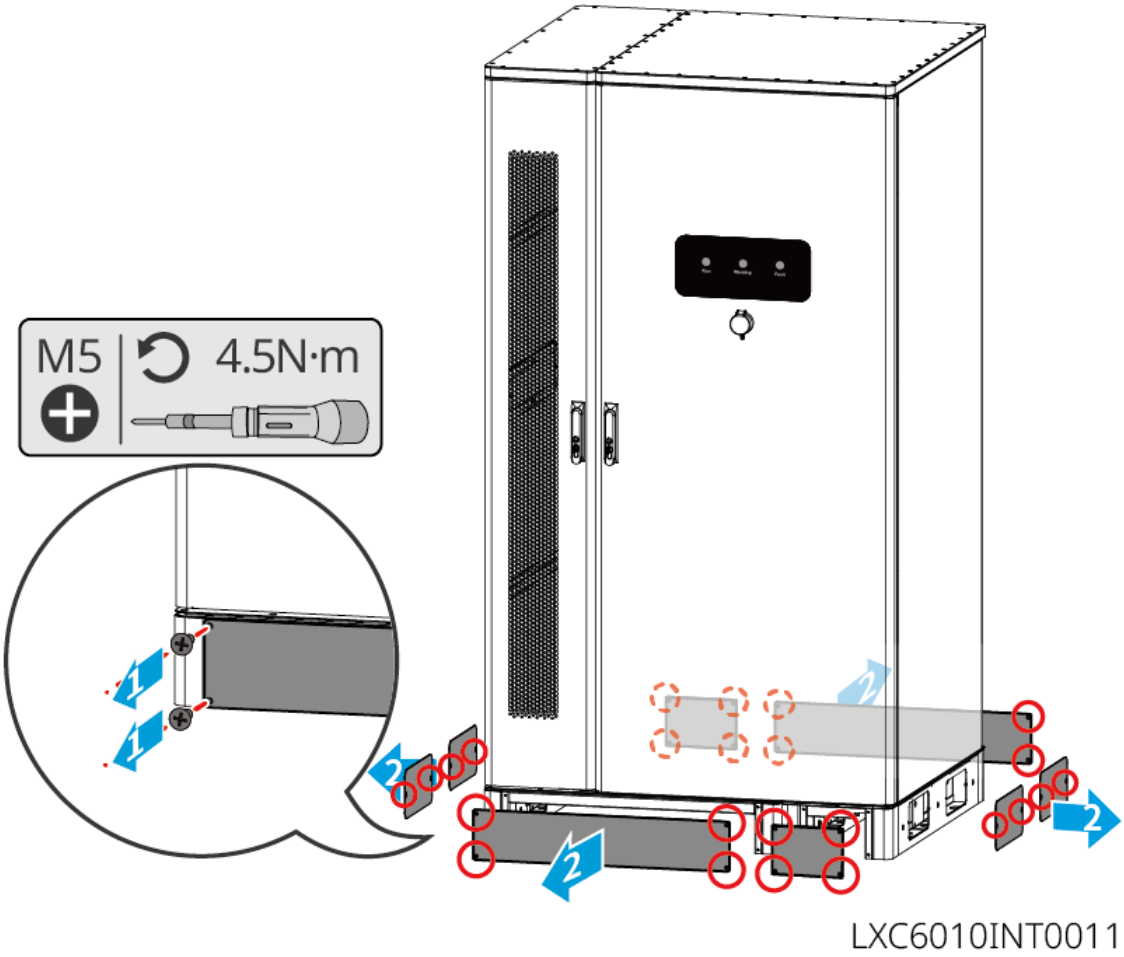

Inverter wiring area baffle

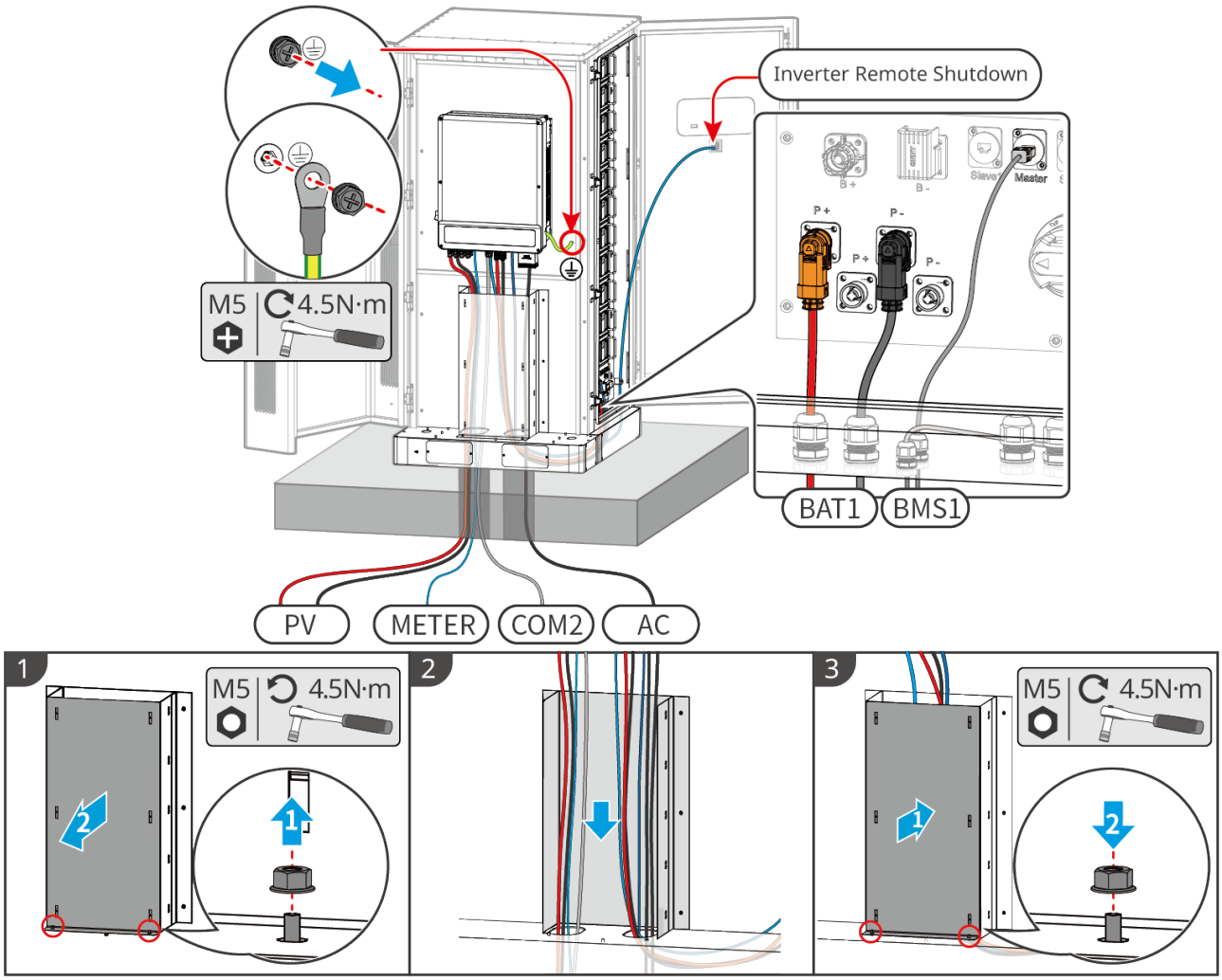

LXC6010ELC0004

5.4 Connecting the PE cable

⚠WARNING

- The protective grounding of the chassis enclosure cannot replace the protective ground wire of the AC output port. When wiring, ensure the protective ground wires at both locations are reliably connected.
- To improve the corrosion resistance of the terminal, it is recommended to apply silicone gel or paint to the exterior of the grounding terminal for protection after the protective ground wire connection installation is complete.
- When installing the equipment, the protective ground wire must be installed first; when removing the equipment, the protective ground wire must be removed last.

5.4.1 Inverter Grounding

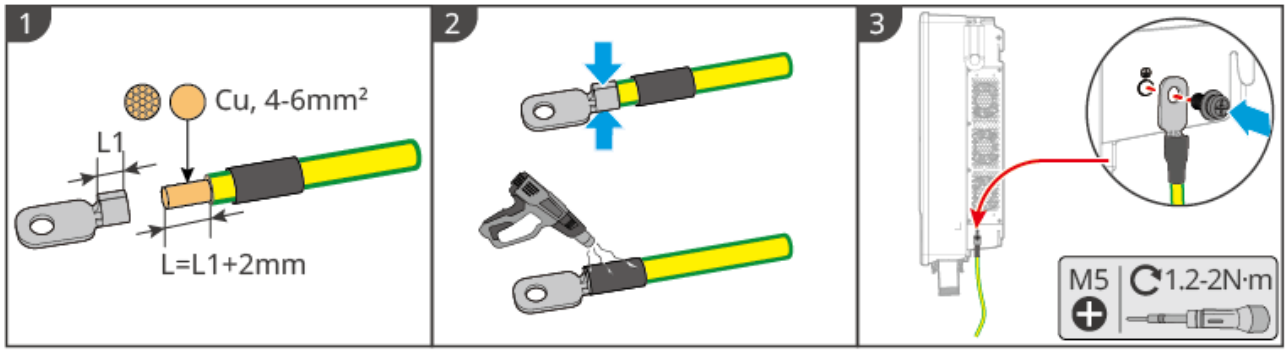

ET3010ELC0001

5.4.2 Battery System Grounding

- **Lynx C series 60kWh industrial and commercial battery system**

Type 1

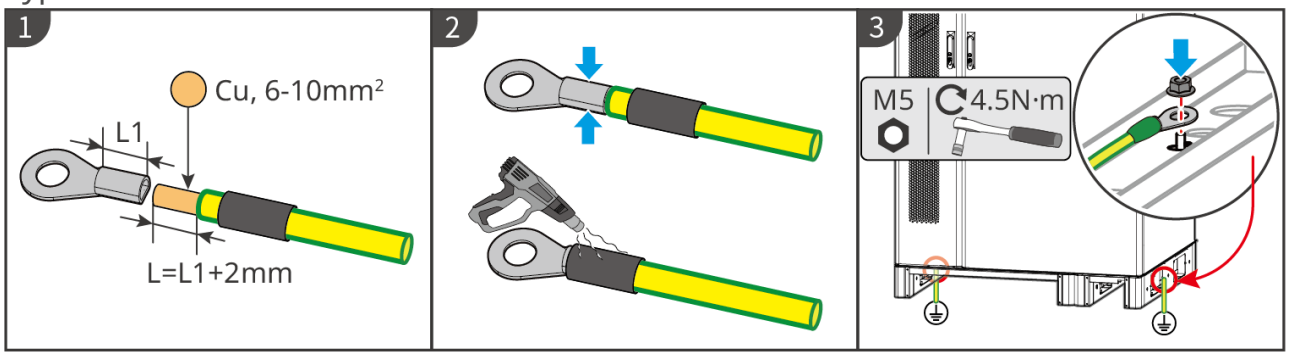

LXC6010ELC0001

Type 2

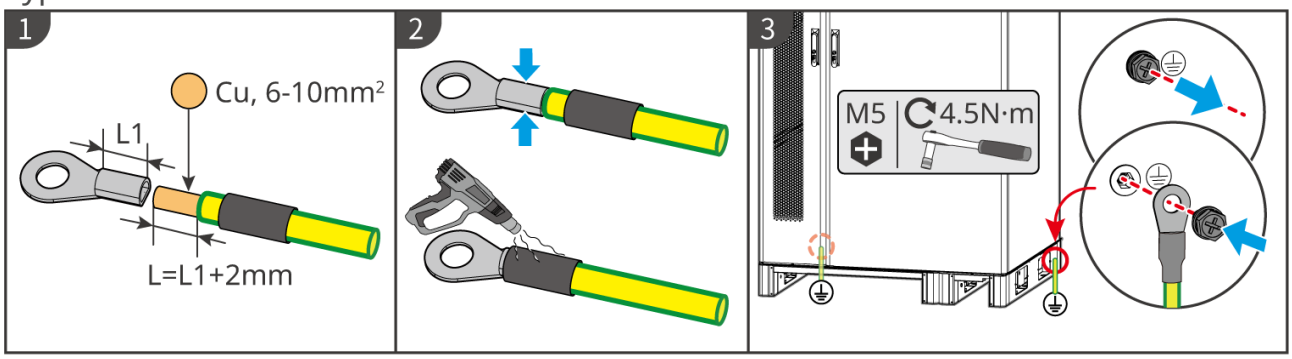

LXC6010ELC0007

- **BAT-Sseries 15.3-56.3kWh high voltageBattery**

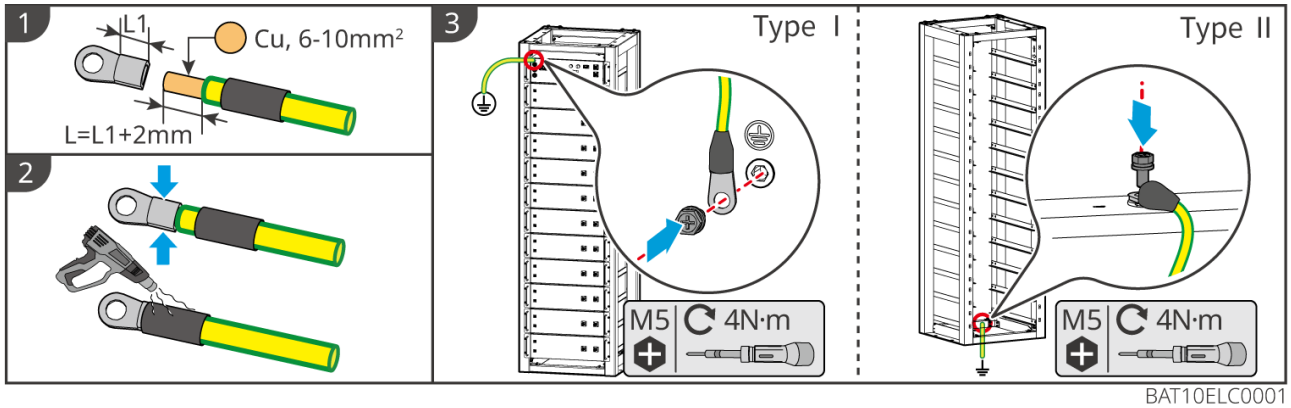

BAT10ELC0001

- **BAT-Cseries 61.4-112.6kWh industrial and commercial battery system**

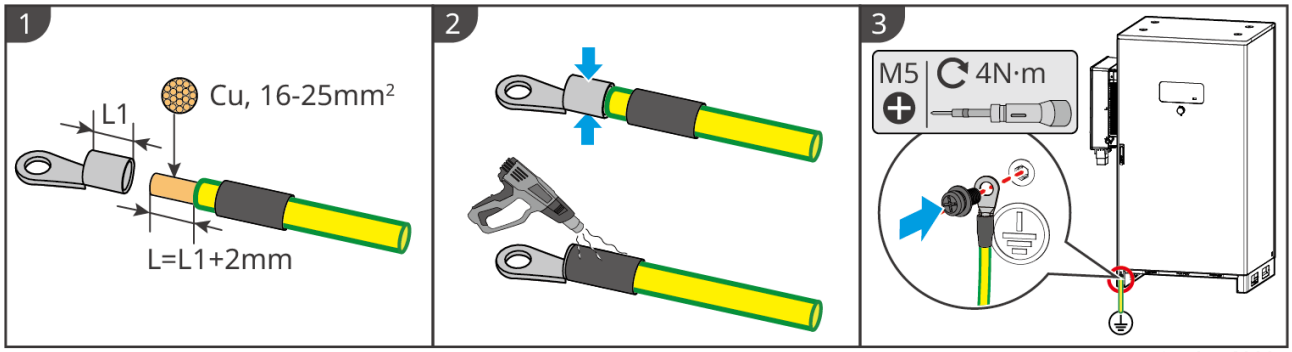

BAT10ELC0007

5.5 Connecting the PV Cable

⚠DANGER

- Do not connect the same PV string to multiple inverters, as this may cause inverter damage.
- Before connecting the PV string to the inverter, verify the following information. Failure to do so may result in permanent inverter damage, and in severe cases, fire causing personal injury or property loss.
  1. Ensure the maximum short-circuit current and maximum input voltage for each MPPT are within the inverter's allowable range.
  2. Ensure the positive terminal of the PV string is connected to the inverter's PV+, and the negative terminal to the inverter's PV-.

⚠WARNING

- The PV string output does not support grounding. Before connecting the PV string to the inverter, ensure the minimum insulation resistance to ground of the PV string meets the minimum insulation resistance requirement (R=Max. Input Voltage/30mA).
- After completing the DC cable connection, ensure the cable connections are secure and not loose.
- Use a multimeter to measure the positive and negative poles of the DC cable to ensure the positive and negative poles are correct without reverse polarity, and the voltage is within the allowable range.

NOTICE

Within each MPPT circuit, the two photovoltaic strings should use the same model, the same number of panels, and the same tilt and azimuth angles to ensure maximum efficiency.

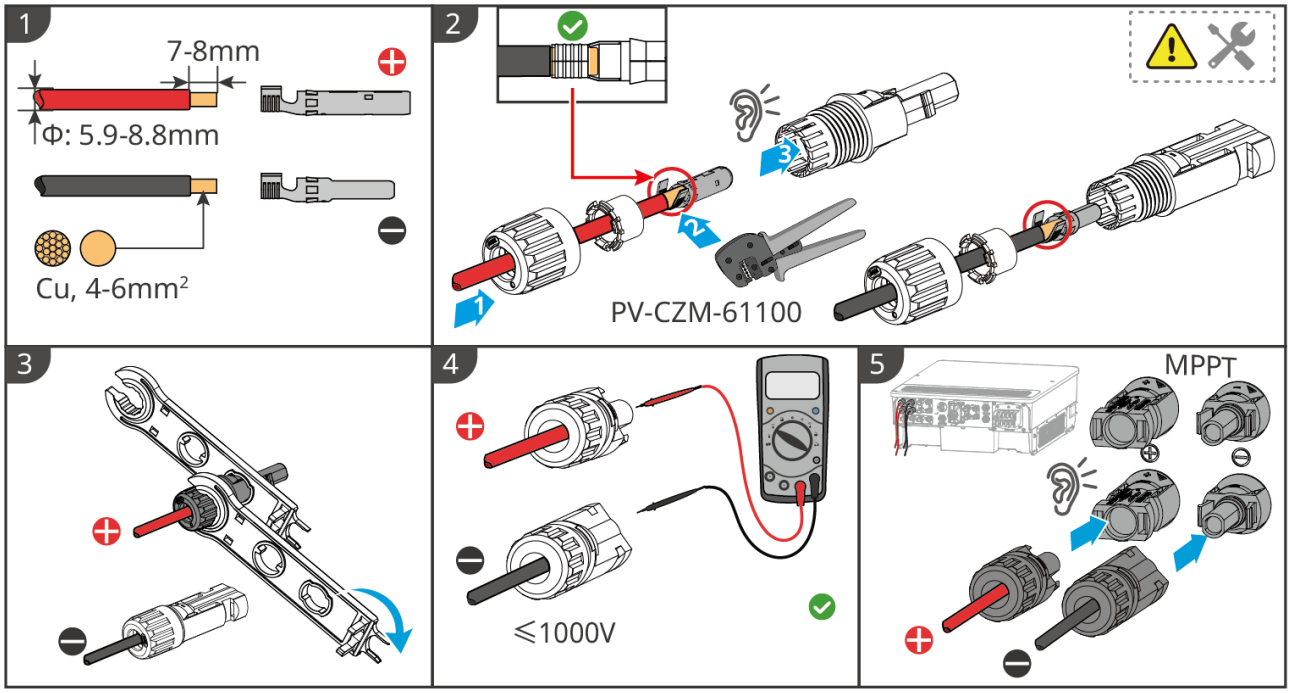

ET3010ELC0030

5.6 Connecting Battery System Cables

DANGER

- Do not connect the same battery pack to multiple inverters, otherwise it may cause inverter damage.
- It is prohibited to connect loads between the inverter and the battery.
- When connecting battery cables, use insulated tools to prevent accidental electric shock or causing a battery short circuit.
- Ensure that the battery open-circuit voltage is within the allowable range of the inverter.
- Before connecting battery cables, confirm that the battery module and high-voltage box are powered off, and the battery cluster switch and DC power supply switch are disconnected.
- Between the inverter and the battery, choose whether to configure a DC switch according to local laws and regulations.

⚠WARNING

- Use a multimeter to measure the positive and negative poles of the DC cable, ensuring that the polarity is correct and not reversed; and the voltage is within the allowable range.
- When wiring, ensure that the battery cables match the battery terminals 'BAT+', 'BAT-', and grounding port exactly. If the cables are connected incorrectly, it may cause equipment damage.
- Ensure that the wire core is fully inserted into the terminal connection hole, with no exposed parts.
- Ensure that the cable connections are tight; otherwise, during equipment operation, it may cause the terminal to overheat and result in equipment damage.
- Do not connect the same battery pack to multiple inverters; otherwise, it may cause inverter damage.

NOTICE

When a 25-30kW inverter is used with the BAT series 61.4kWh commercial & industrial battery system, connecting two BAT ports is required to achieve full load operation.

Battery System Wiring Diagram

- Lynx C Series 60kWh Commercial & Industrial Battery System

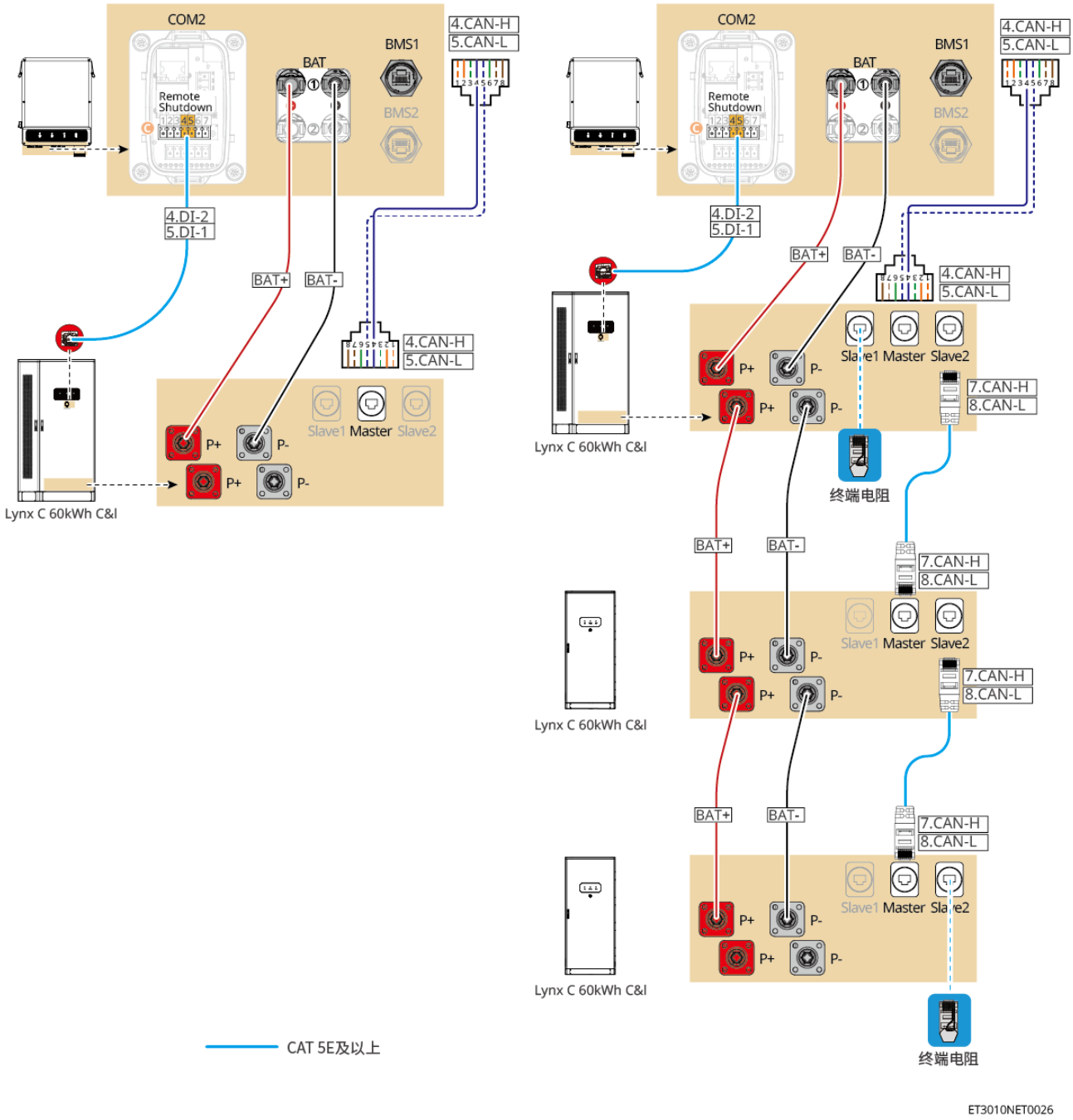

- BAT-S Series 15.3-56.3kWh High Voltage Battery

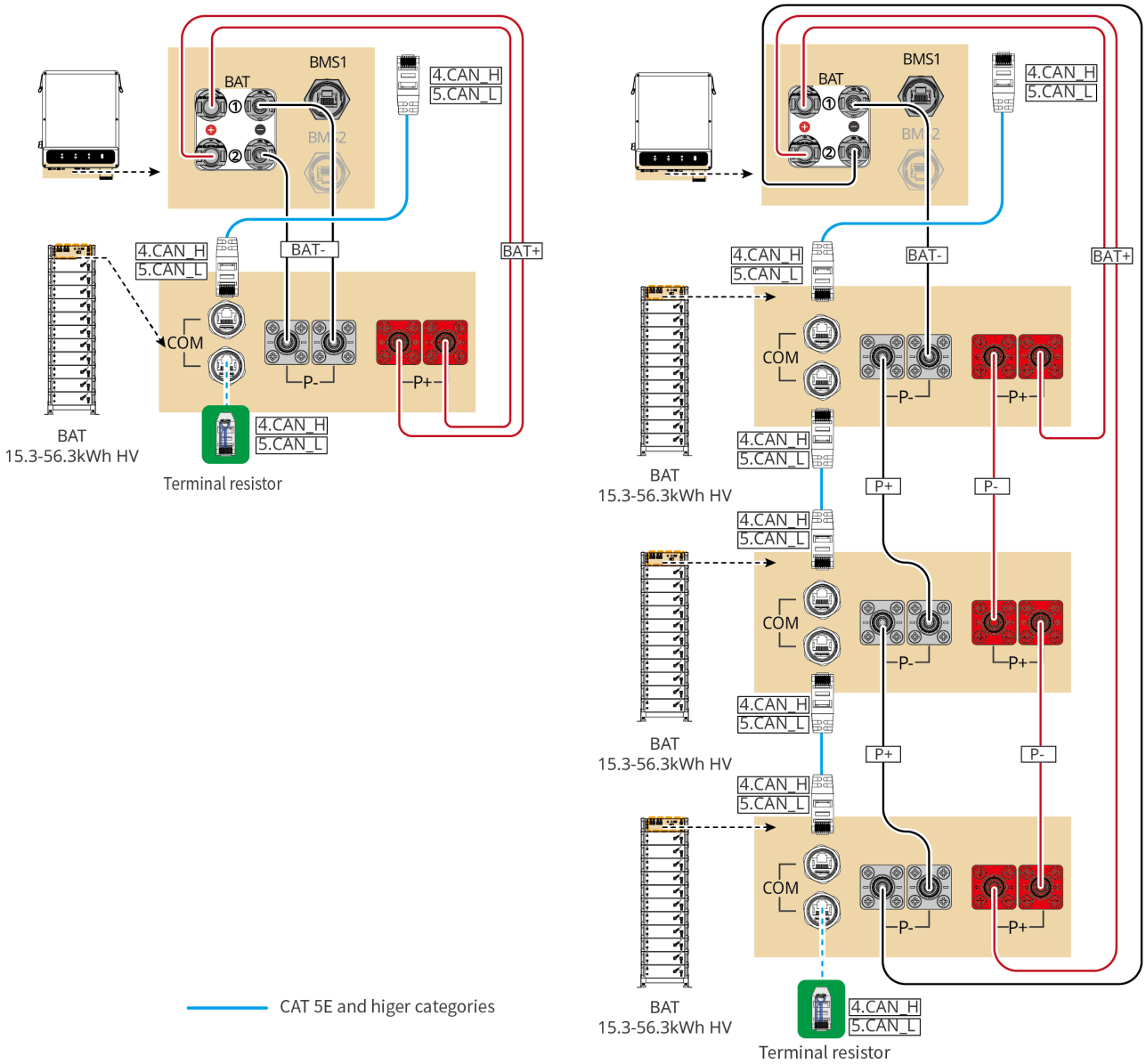

- BAT-C Series 61.4-112.6kWh Commercial & Industrial Battery System

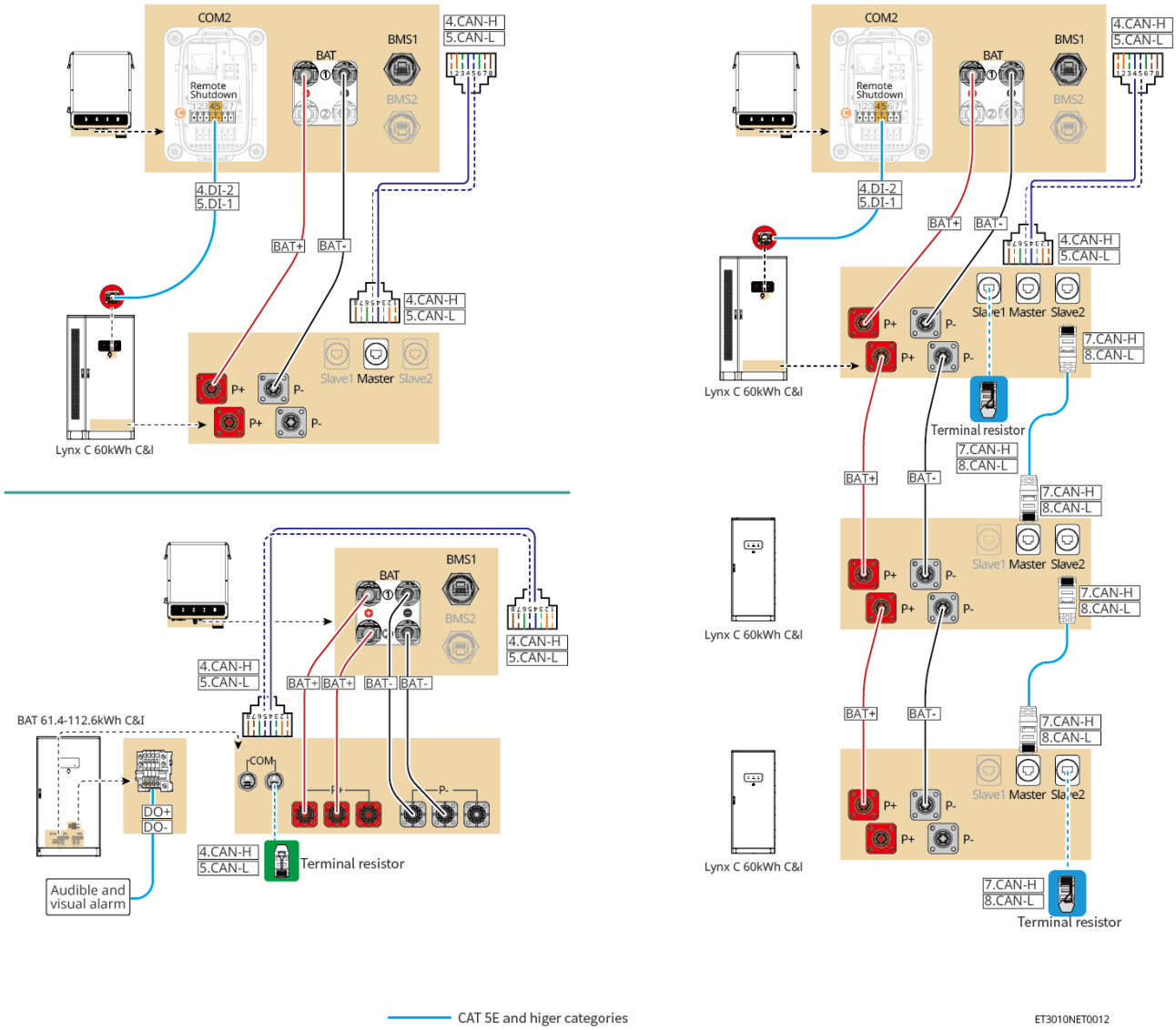

5.6.1 Paired with Lynx C Series 60kWh Commercial & Industrial Battery System

5.6.1.1 Battery Wire Feedthrough Introduction

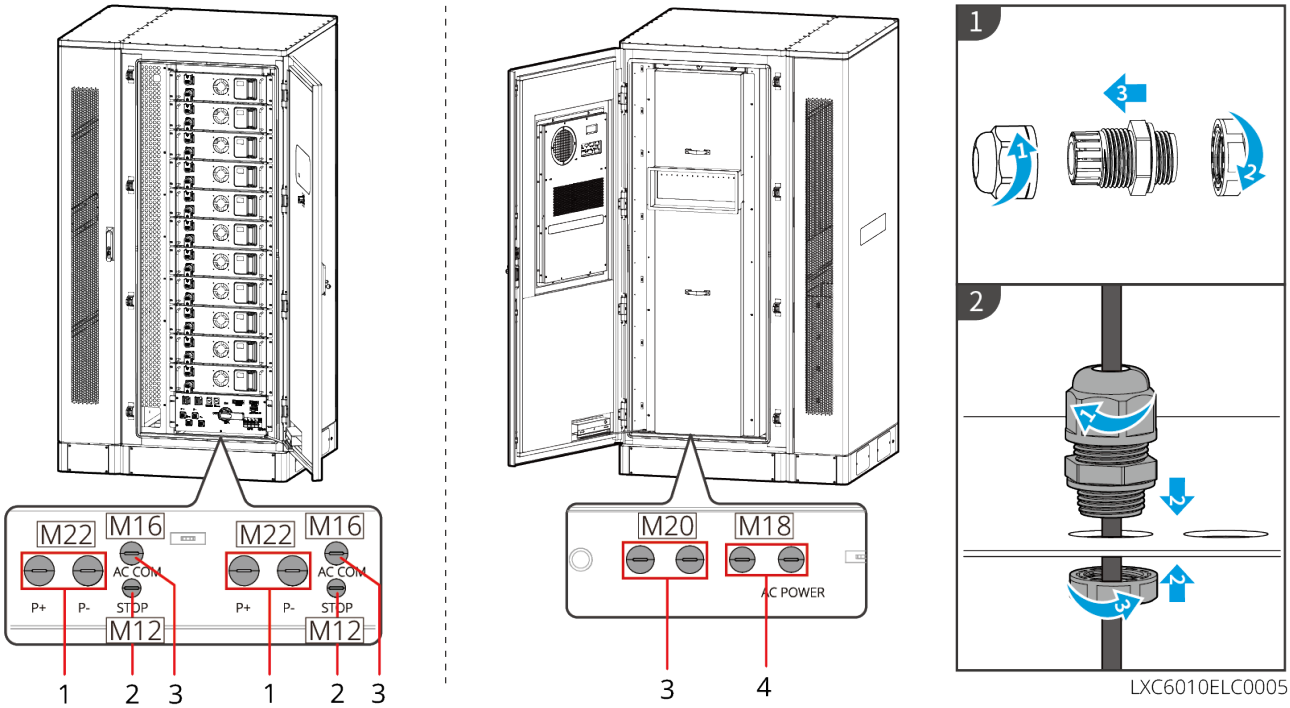

No.	Description	No.	Description
1	Battery power cable pass-through hole	2	Emergency stop button control cable pass-through hole
3	Communication cable pass-through hole	4	Air conditioning cable pass-through hole
5	Reserved pass-through hole	-	-

5.6.1.2 Connecting the Power Cable between the Inverter and Battery

⚠WARNING

- Use a multimeter to measure the positive and negative poles of the DC cable to ensure correct polarity, with no reverse connection; and that the voltage is within the allowable range.
- During wiring, ensure the battery cables match the "BAT+", "BAT-", and grounding ports on the battery terminals exactly. Incorrect cable connection will cause equipment damage.
- Ensure the wire core is fully inserted into the terminal connection hole with no exposed part.
- Ensure the cable connections are tight. Otherwise, during equipment operation, the terminal may overheat, causing equipment damage.
- Do not connect the same battery bank to multiple inverters, as this may cause inverter damage.

NOTICE

- The battery system comes with power cables for connecting to the inverter in the box.
  - If the inverter accessories include type one terminals, cut off the terminals on the power cable from the battery accessories that connect to the inverter, and use the battery connectors provided with the inverter to remake the power cable.
  - If the inverter accessories include type two terminals, you can directly use the power cable from the battery accessories.
  - If there are no terminals on the power cable from the battery accessories for connecting to the inverter, use the connectors from the inverter accessories to make the power cable.
- Power cables for parallel clustering between battery systems need to be prepared by yourself.
- Please connect the battery system to the BAT1 port of the inverter.

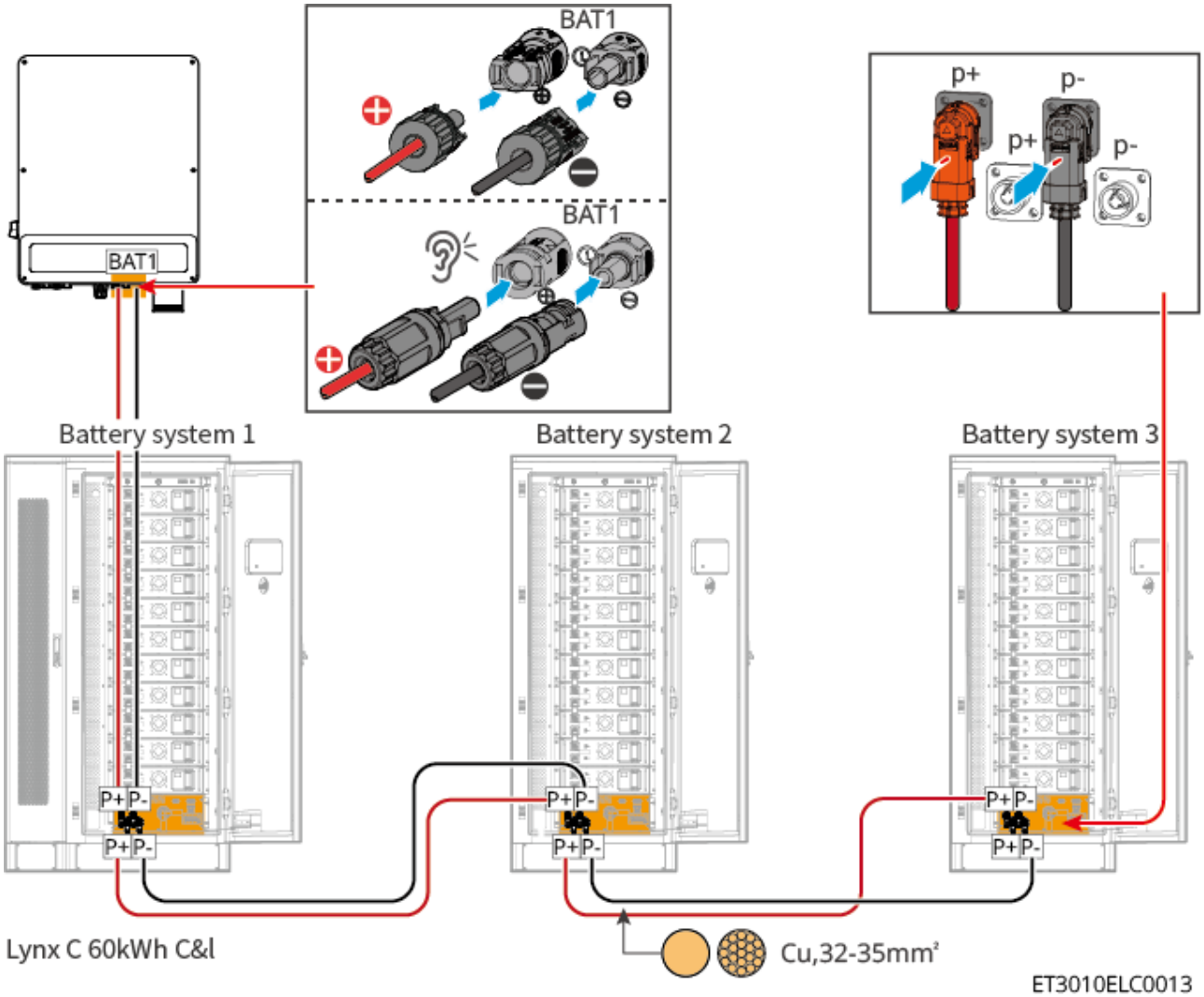

Inverter End Cable Fabrication Method

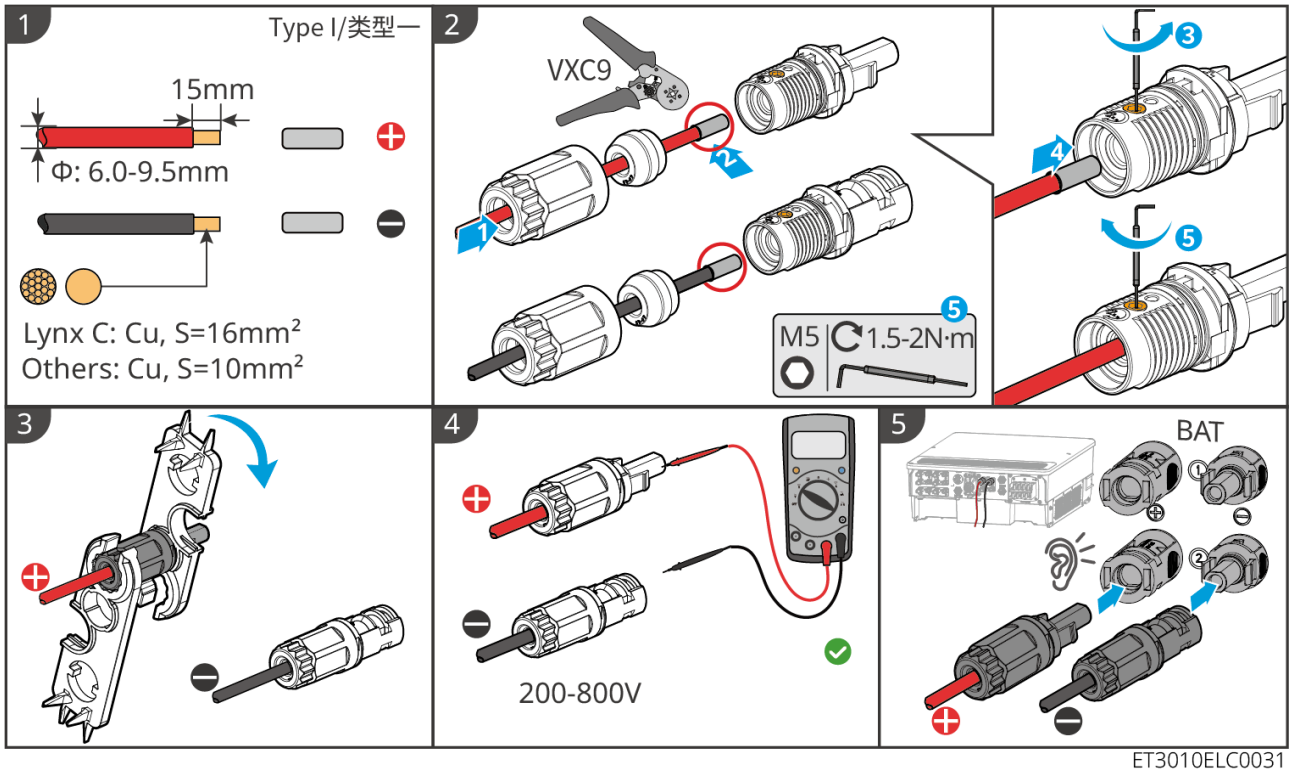

ET3010ELC0031

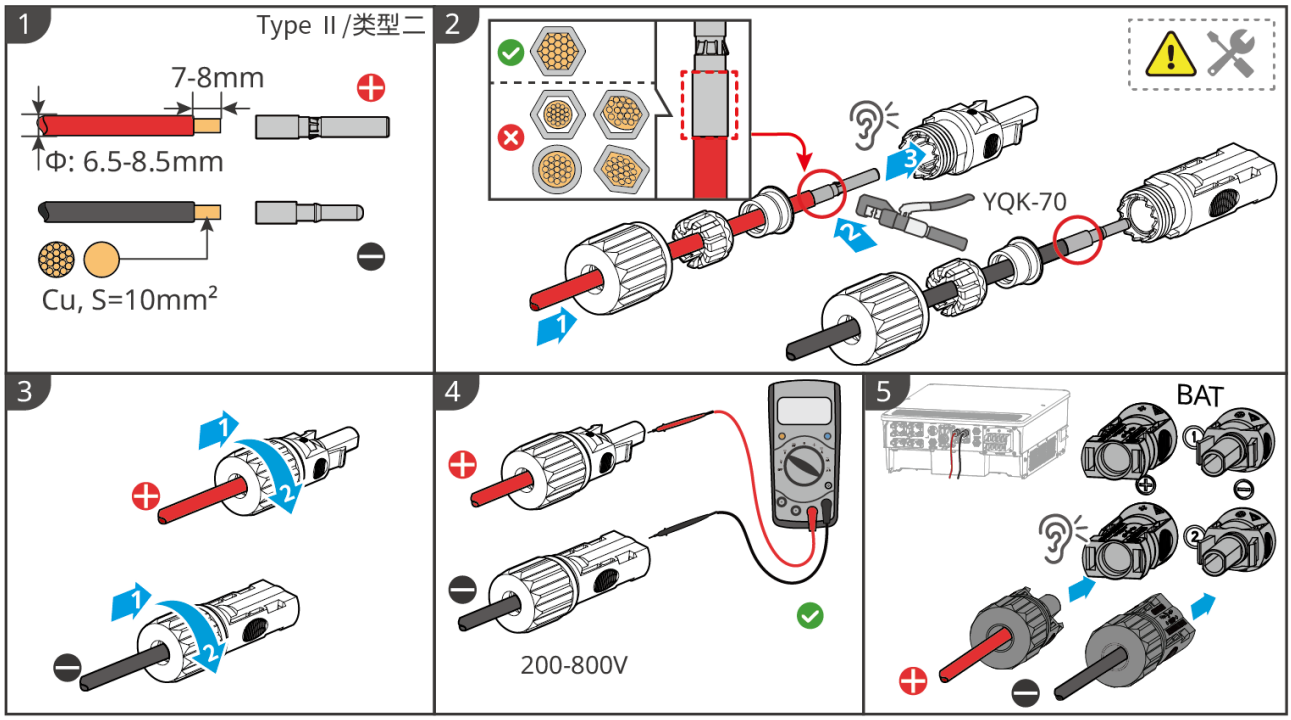

ET3010ELC0032

Battery System Cluster Power Cable Fabrication Method

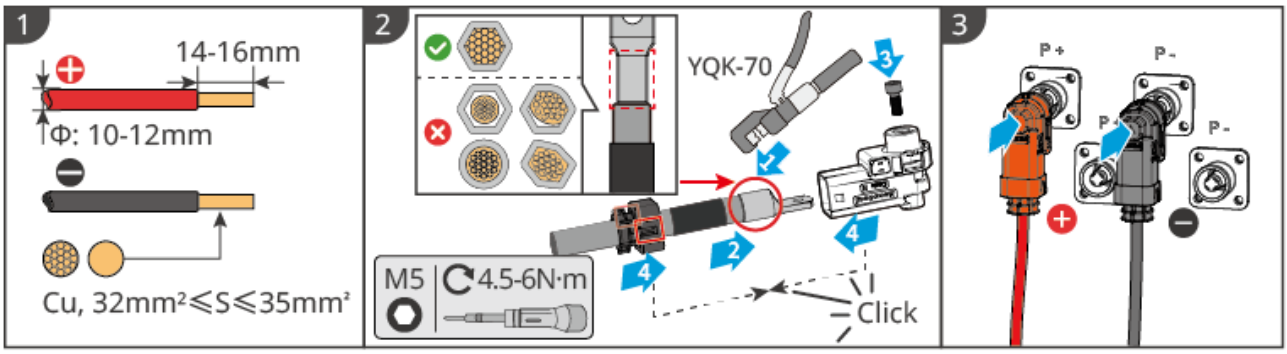

LXC6010ELC0002

5.6.1.3 Connecting the Battery Communication Cable

⚠WARNING

Do not omit the battery system terminal resistor, otherwise communication between battery systems will fail.

NOTICE

- The battery system is shipped with a BMS battery communication cable. It is recommended to use the provided cable. If the supplied communication cable does not meet the requirements, please prepare your own shielded network cable and shielded RJ45 connector.
- Please connect the battery system to the BMS1 communication port of the inverter; otherwise, normal communication may not be possible.
- The emergency stop switch communication cable is pre-installed on the cabinet. If the supplied communication cable does not meet the requirements, please prepare your own communication cable.
- For parallel communication cables between battery systems, please prepare shielded network cables and shielded RJ45 connectors that meet the EIA/TIA-568B standard.
- PIN4 and PIN5 are only for connecting to the inverter communication. There is no need to crimp PIN4 and PIN5 for the parallel communication cables between battery systems.
- When connecting battery systems in parallel, connect the inverter remote shutdown port to the main battery system.

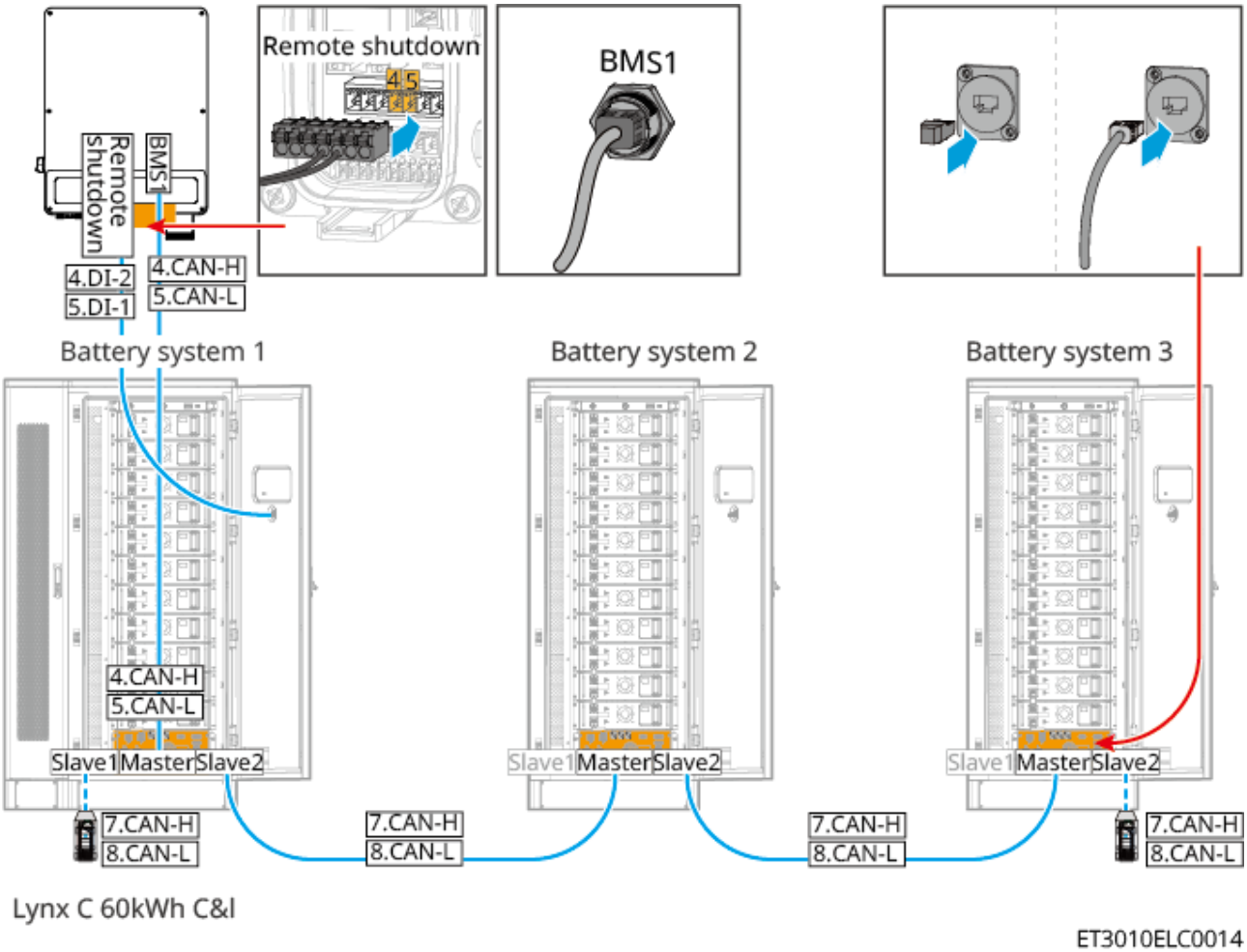

Explanation of BMS Communication Connection between Inverter and Battery:

Device	port	Definition	Description
Inverter	BMS1	4: CAN_H 5: CAN_L	CAN communication between the Inverter and the Battery
	Remote Shutdown	7: GND 8: Remote Shutdown	Connected to the battery system to control the emergency shutdown of the battery
Battery	Slave1	7: CAN_H 8: CAN_L	Parallel cluster CAN communication between batteries
	Master	1: RS485_A1 2: RS485_B1	Reserved for communication with the Inverter

Device	port	Definition	Description
		4: CAN_H 5: CAN_L	Communication with the Inverter
		7: CAN_H 8: CAN_L	Parallel cluster CAN communication between batteries
	Slave2	7: CAN_H 8: CAN_L	Parallel cluster CAN communication between batteries
	Emergency Stop Switch	1: NC 2: COM	Connected to the Inverter to control the emergency shutdown of the battery

5.6.1.4 Connecting Internal Power Busbars in Battery Systems

NOTICE
If the aluminum busbars in the battery system have been installed at the factory, please use tools to recheck the torque.

Scenario with partially installed inter-cell aluminum busbars before shipment:

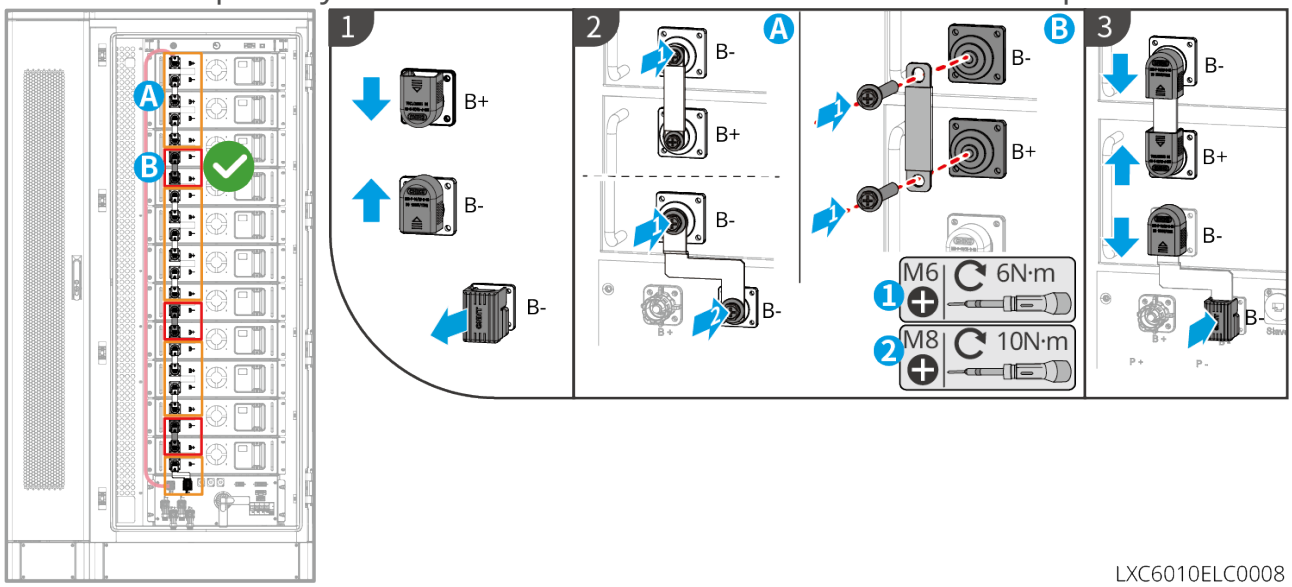

LXC6010ELC0008

Scenario with uninstalled inter-cell aluminum busbars before shipment:

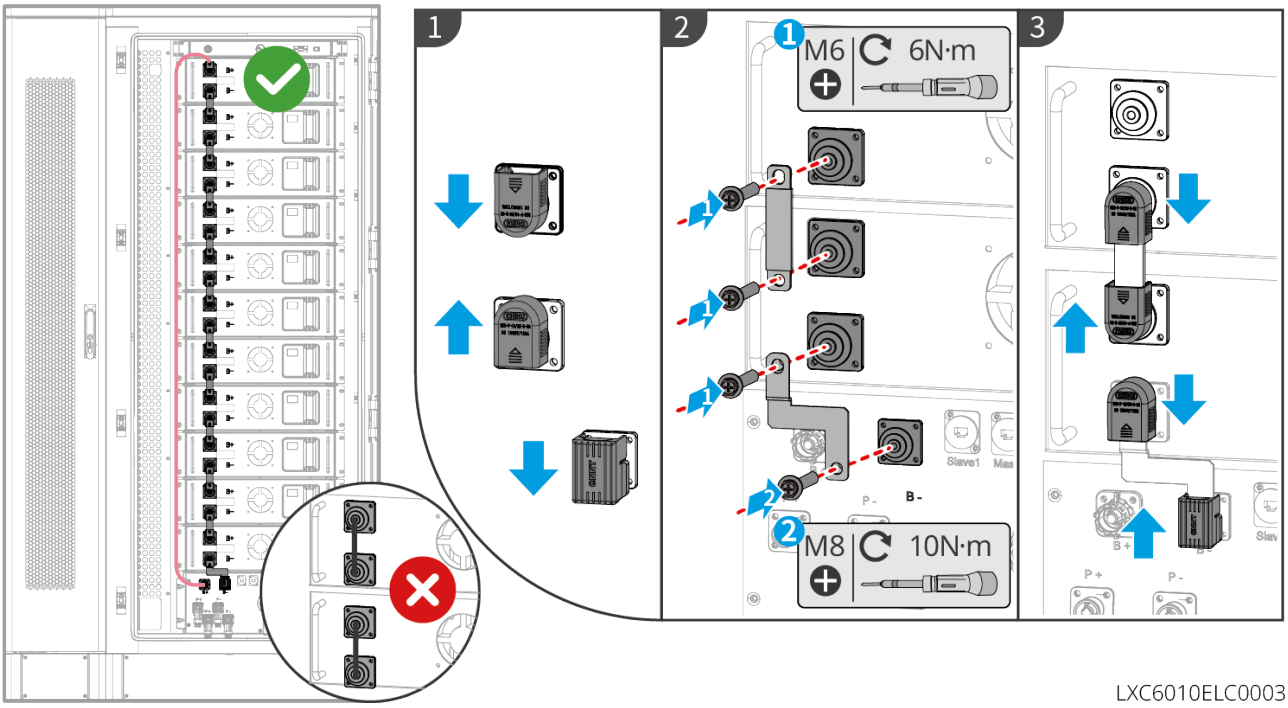

LXC6010ELC0003

5.6.1.5 Connecting Battery System AC Power Cables

NOTICE

- The air conditioner power cord is pre-installed on the cabinet. If the provided power cord does not meet the requirements, please prepare an extension cable yourself.
- It is recommended to connect the air conditioner power cord to the power distribution cabinet for power supply.
- If the air conditioner needs to be used for emergency power supply, the air conditioner power cord can be connected to the inverter BACK UP side for power.
- To ensure that the air conditioner can be safely disconnected from the power distribution cabinet in case of abnormalities, please install an AC switch between the air conditioner and the power distribution cabinet. The AC switch specification should be no less than 16A.
- To ensure heat dissipation performance, do not arbitrarily modify the default temperature parameter settings of the air conditioner.

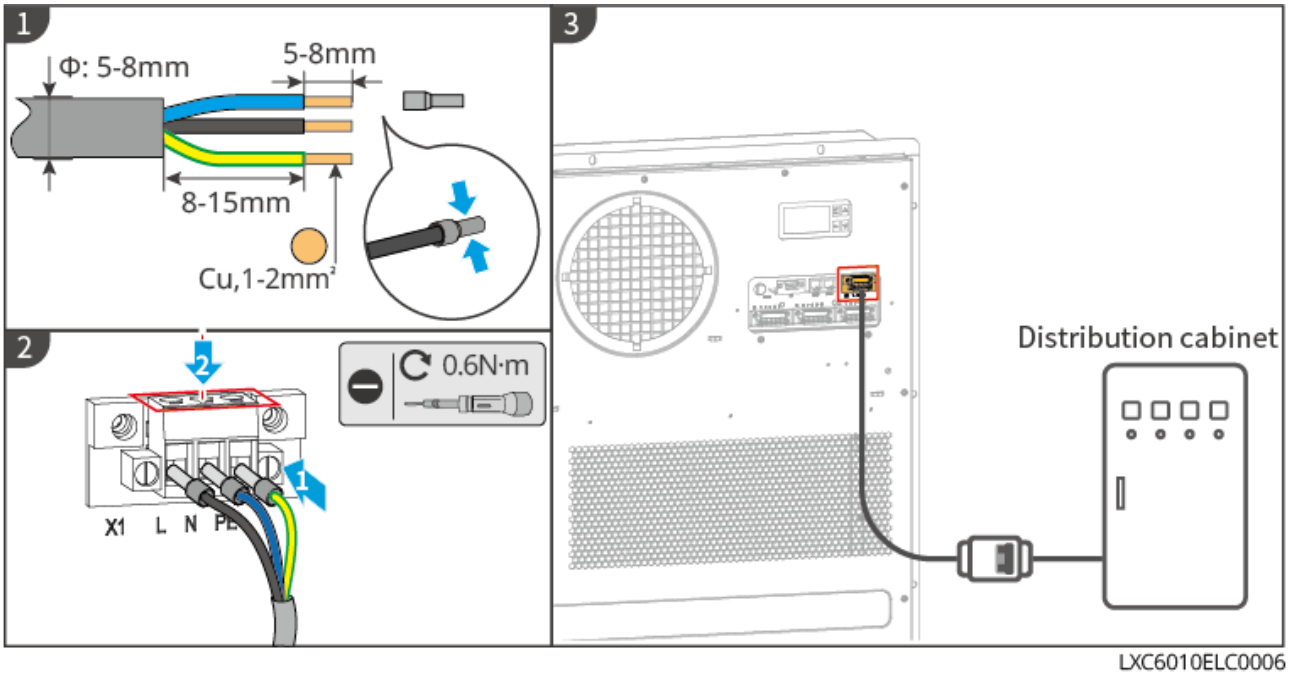

5.6.1.6 Connecting the Battery System Air Conditioning Drain Pipe

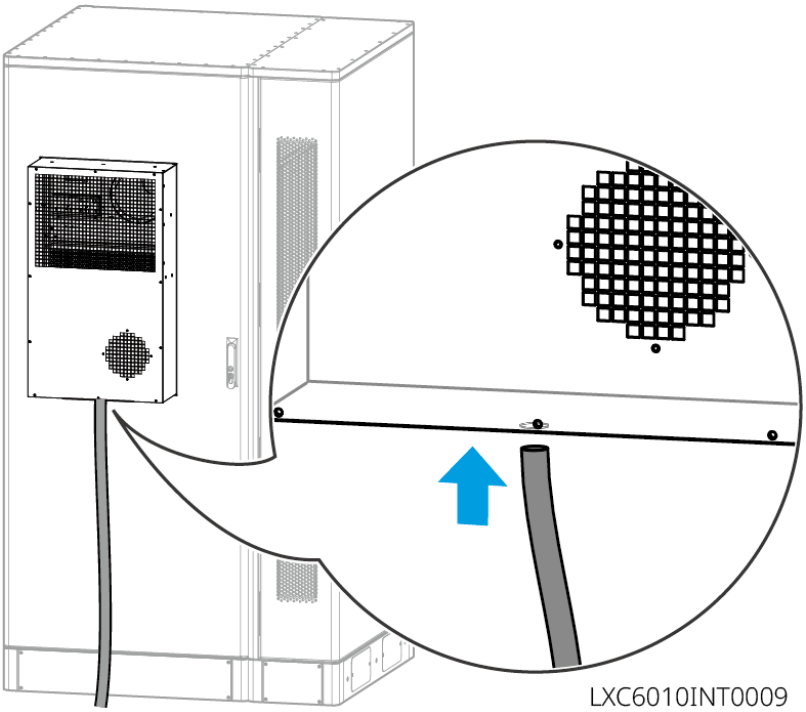

5.6.1.7 Open the Fire Switch

NOTICE
The "open" (turn on) and "close" (turn off) functions of the firefighting equipment can only be activated during professional maintenance or replacement of the temperature-sensitive activation component.

Scenario for operating the fire equipment switch:

- If a 'Do Not Touch' tag is present, no action is required.

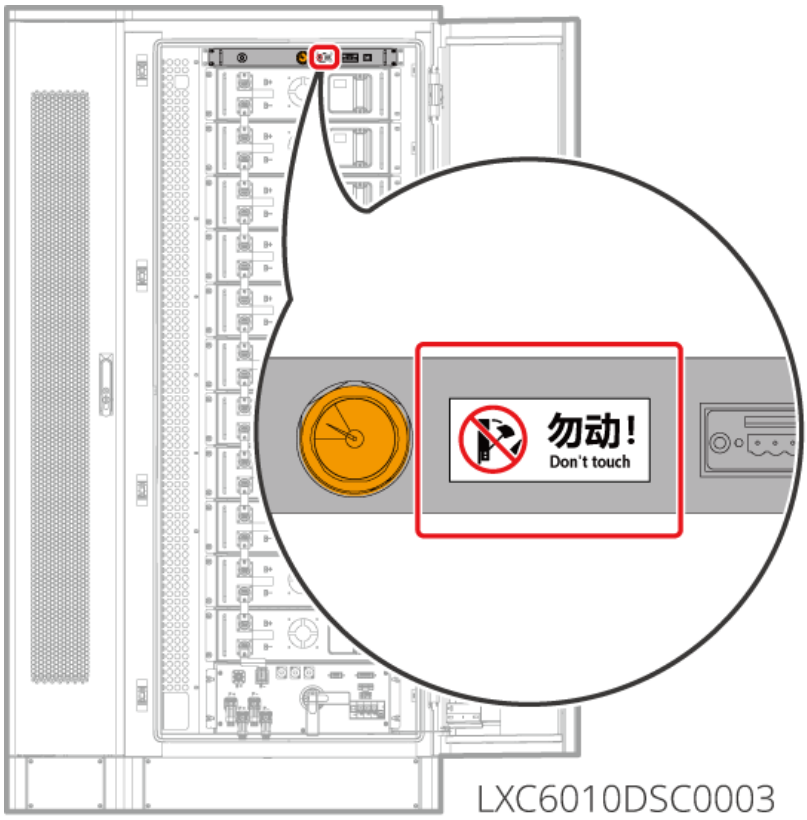

- If no tag is present, please refer to the following steps to open the fire switch. Use a 14mm wrench to rotate the screw behind the pressure gauge counterclockwise approximately 1.5 turns until it is fully tightened, and the fire system will be successfully opened.

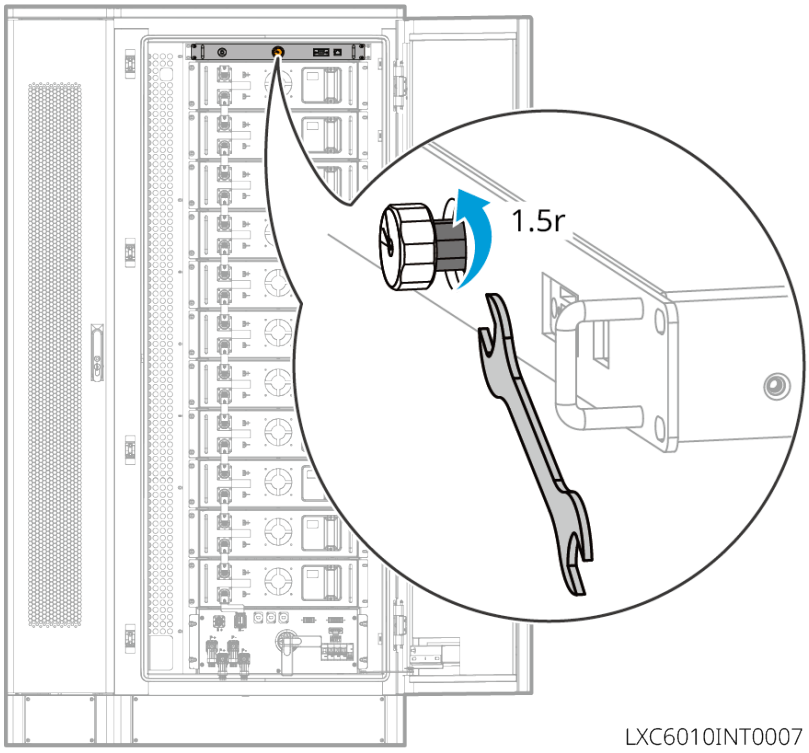

5.6.1.8 Install Baffle

After the cables are connected, install the bottom baffle.

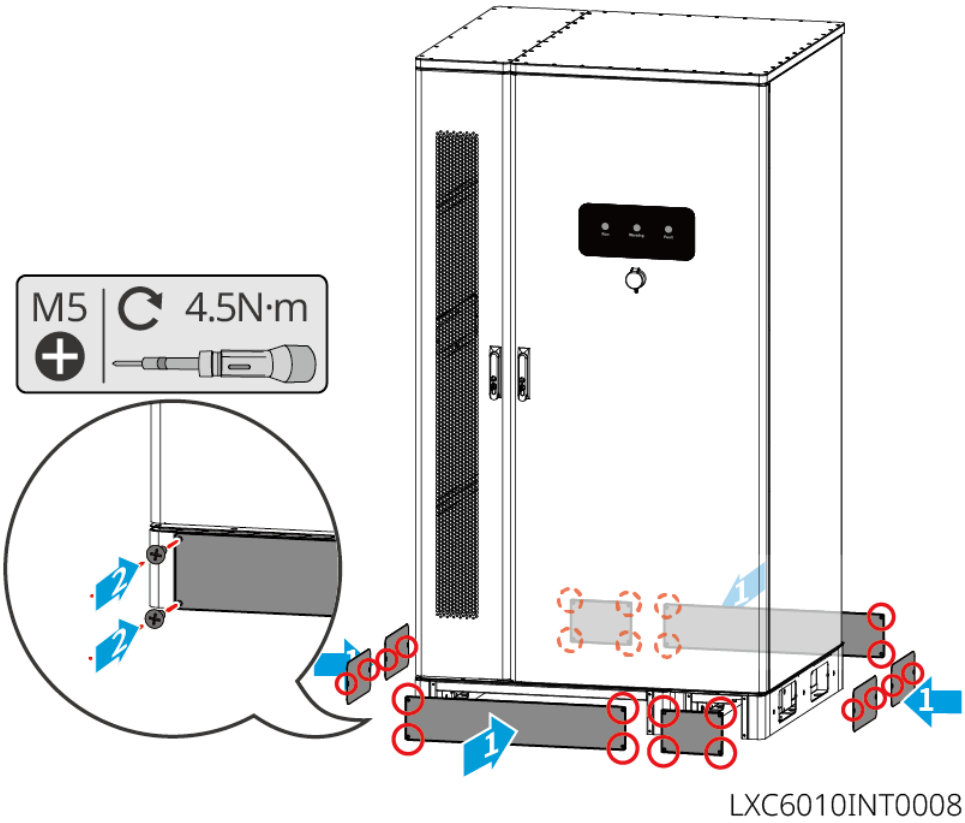

5.6.2 Paired with BAT-S Series 15.3-56.3kWh High-Voltage Battery

Inverter	GW12KL-ET	GW18KL-ET	GW15K-ET	GW20K-ET	GW25K-ET	GW29.9K-ET	GW30K-ET
Number of BAT Ports	1	2	1	1	2	2	2
Minimum PACKs Required for BAT-S Series Battery (Operational)	3PACK	3PACK	5PACK	5PACK	5PACK	5PACK	5PACK
Minimum PACKs Required for BAT-S Series Battery (Full Load)	5PACK	4PACK	6PACK	8PACK	5PACK	6PACK	6PACK

5.6.2.1 Connecting the Power Cable between the Inverter and Battery

NOTICE
The BAT-S series 15.3-56.3kWh high-voltage battery supports up to 6 battery cabinets in parallel.

Wiring Overview

- The 15-20kW inverter has only one BAT port; connect one when used with a battery.

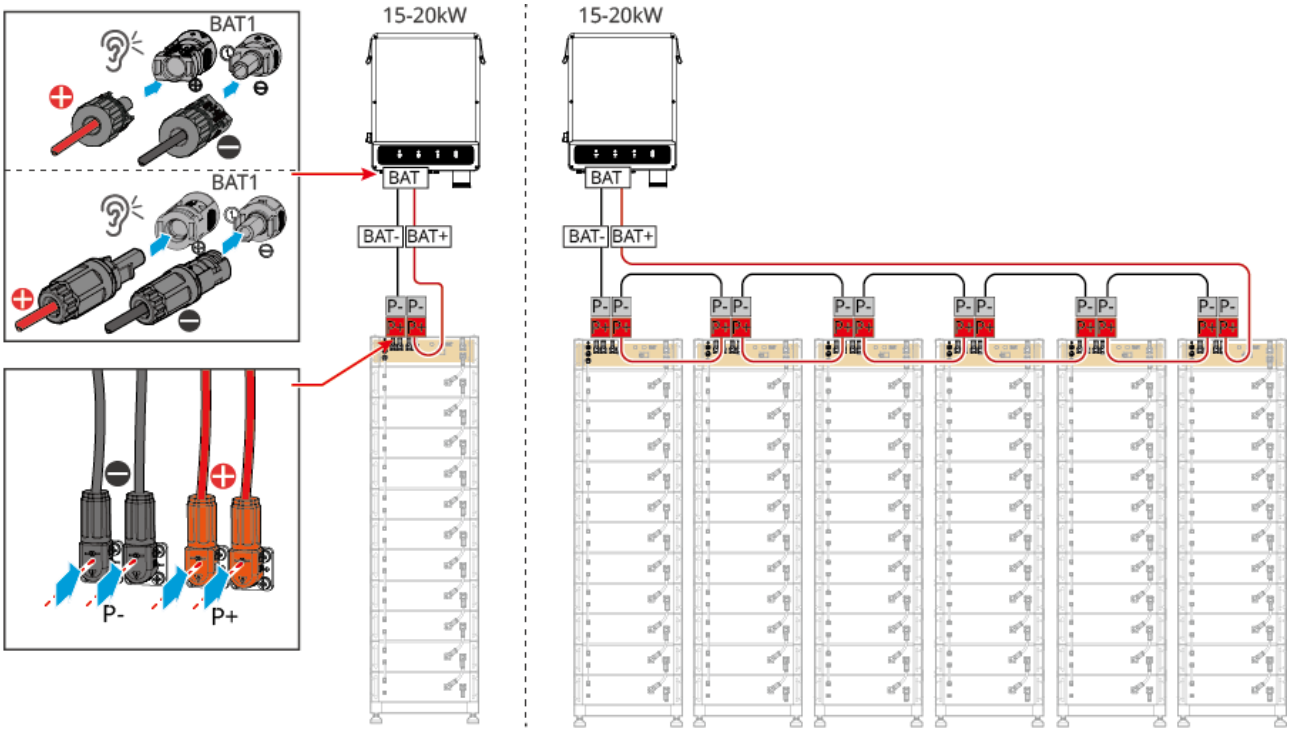

ET3010ELC0038

- The 25-30kW inverter has two BAT ports; both need to be connected when used with a battery.

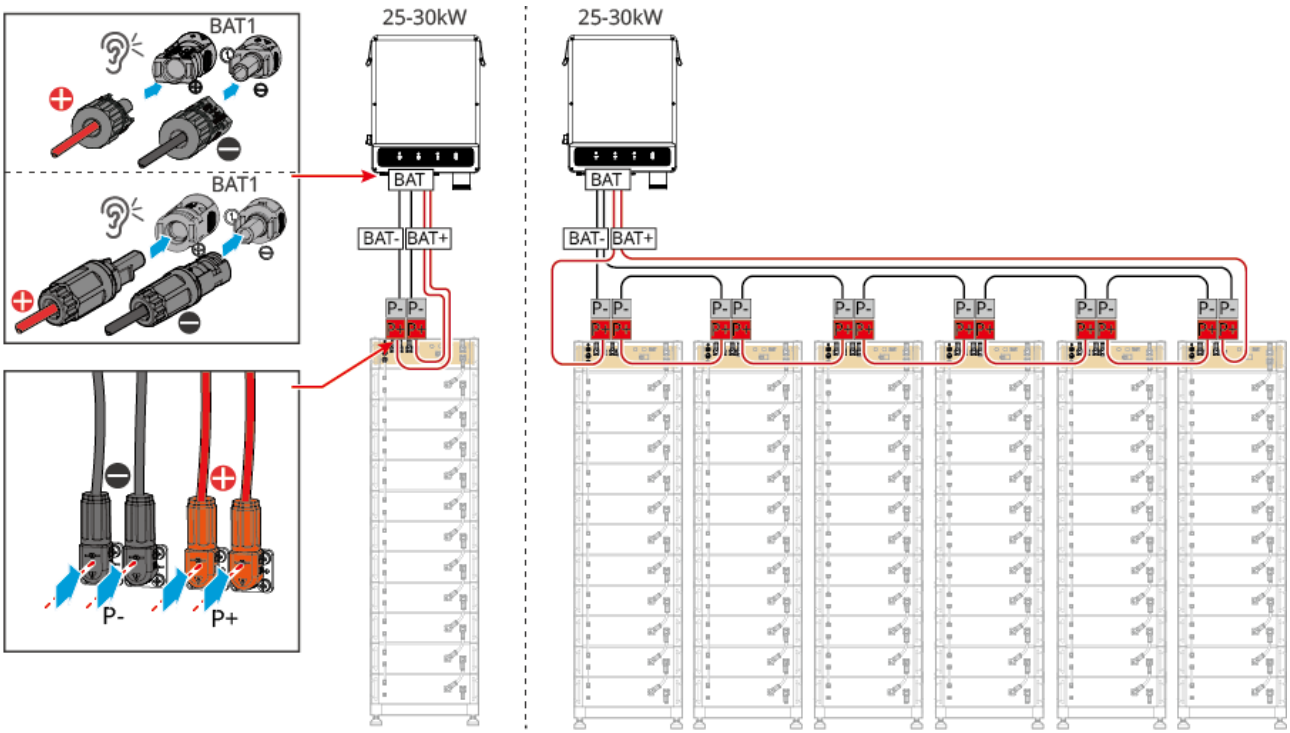

ET3010ELC0039

Inverter-end Cable Manufacturing Method

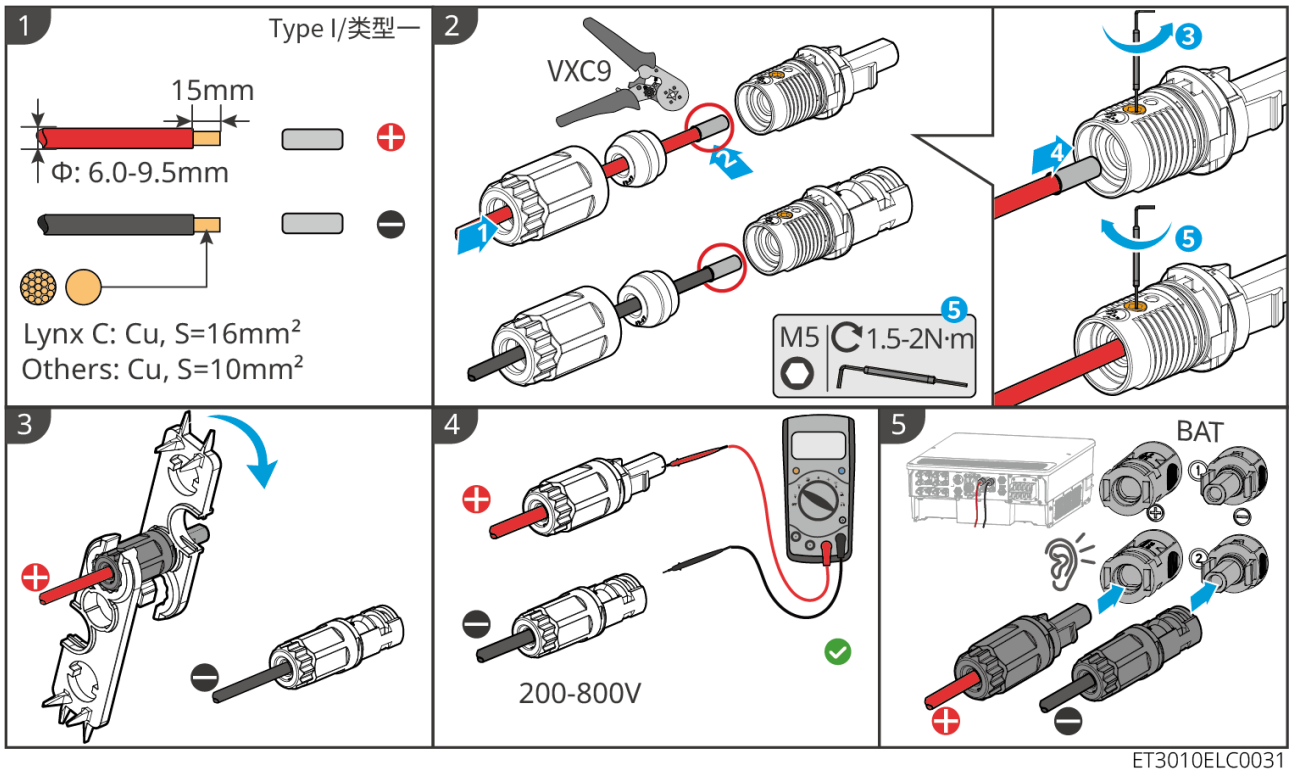

ET3010ELC0031

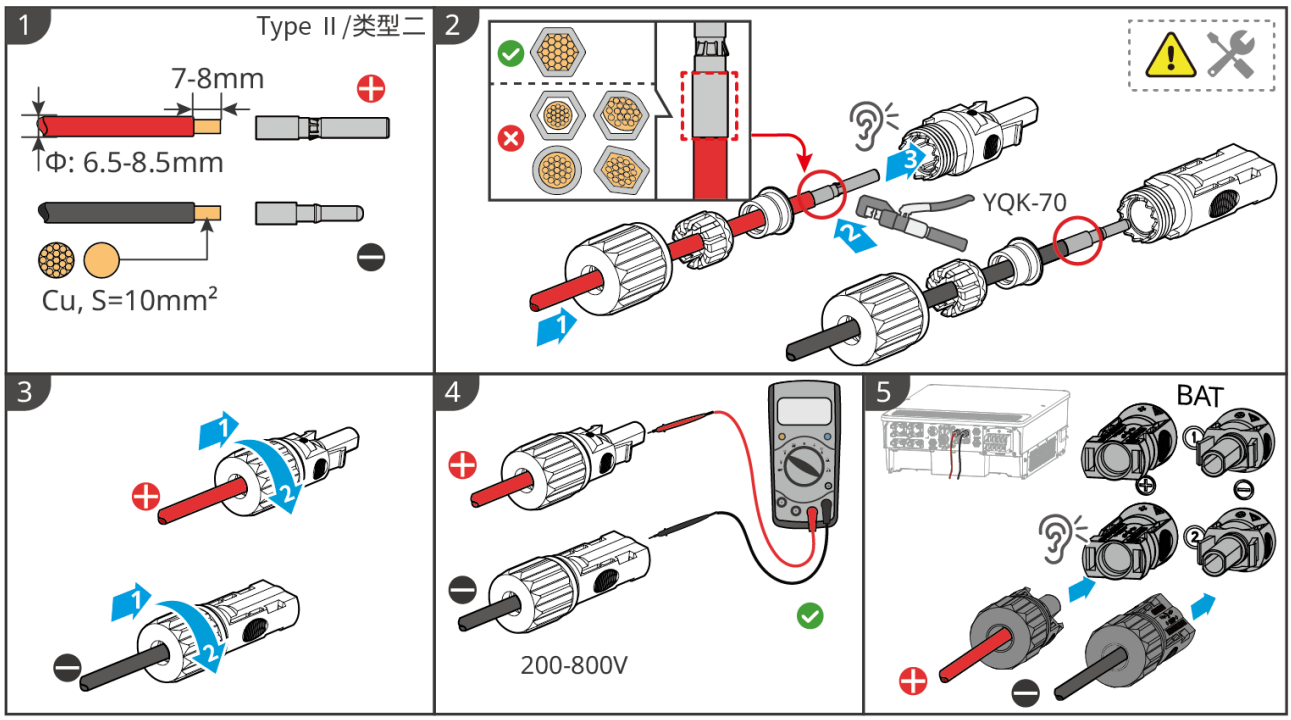

ET3010ELC0032

Battery-end Cable Manufacturing Method (Including Parallel Cluster Wiring)

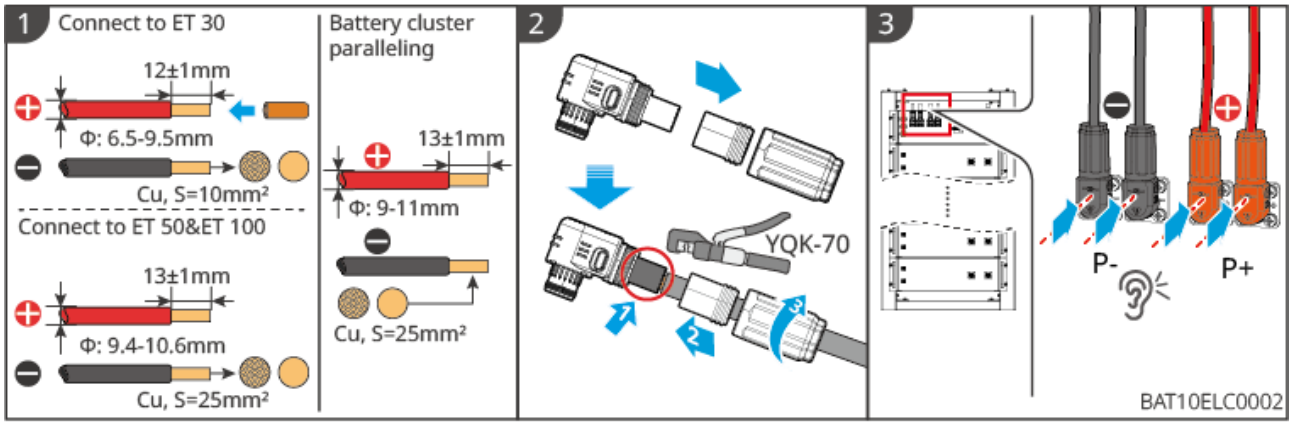

5.6.2.2 Connecting Power Cables Between Batteries

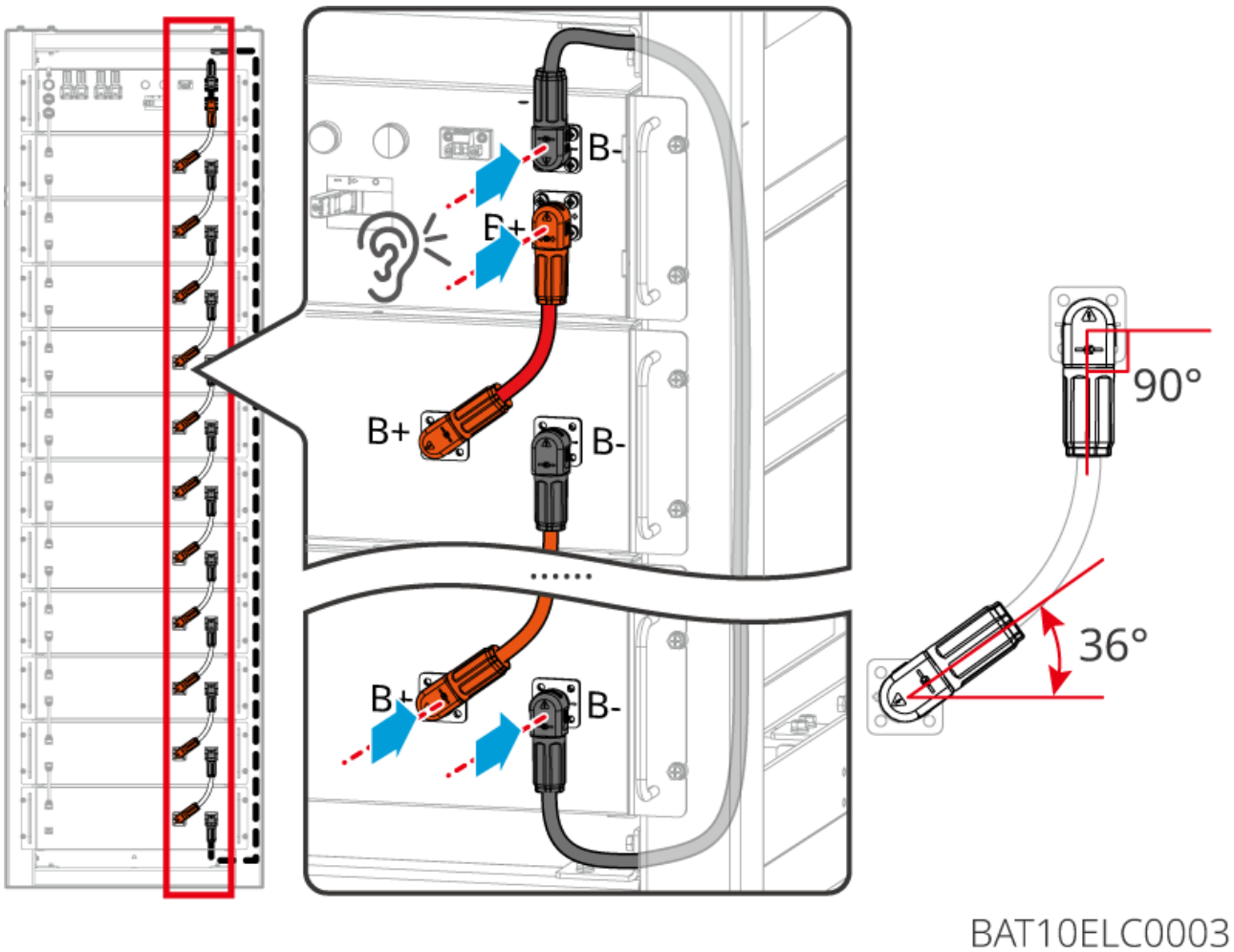

5.6.2.3 Connecting Communication Cables

NOTICE
The battery system includes a communication cable with the package. Please use the included communication cable.

Instructions for BMS Communication Connection between Inverter and Battery:

port	Definition	Description
COM1, COM2	1: RS485_A1 2: RS485_B1	Communicate with inverter (reserved).
	4: CAN_H 5: CAN_L	Communicate with inverter or parallel cluster communication.

Inverter to Battery Communication Wiring

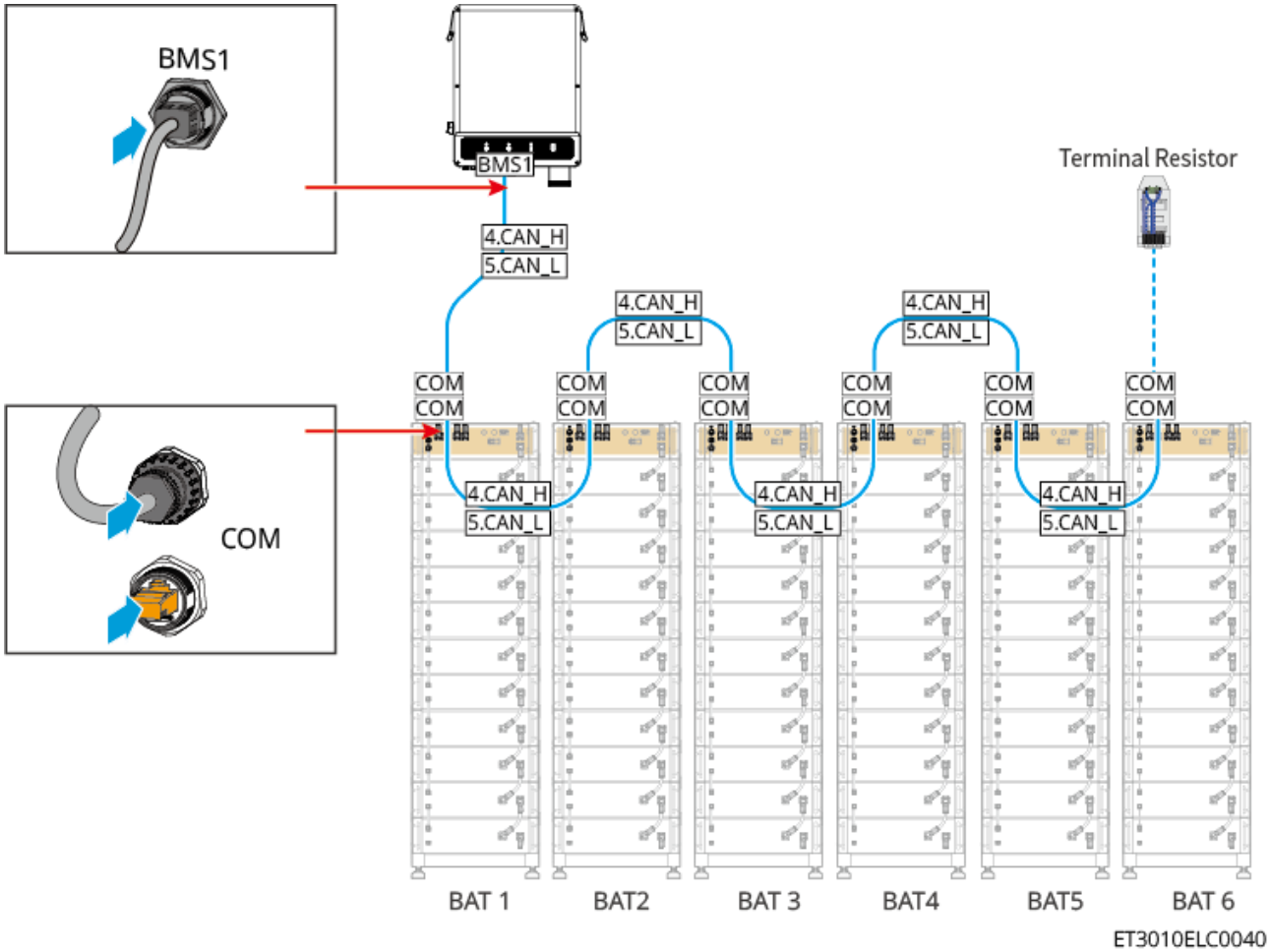

Communication Wiring between Battery PACKs

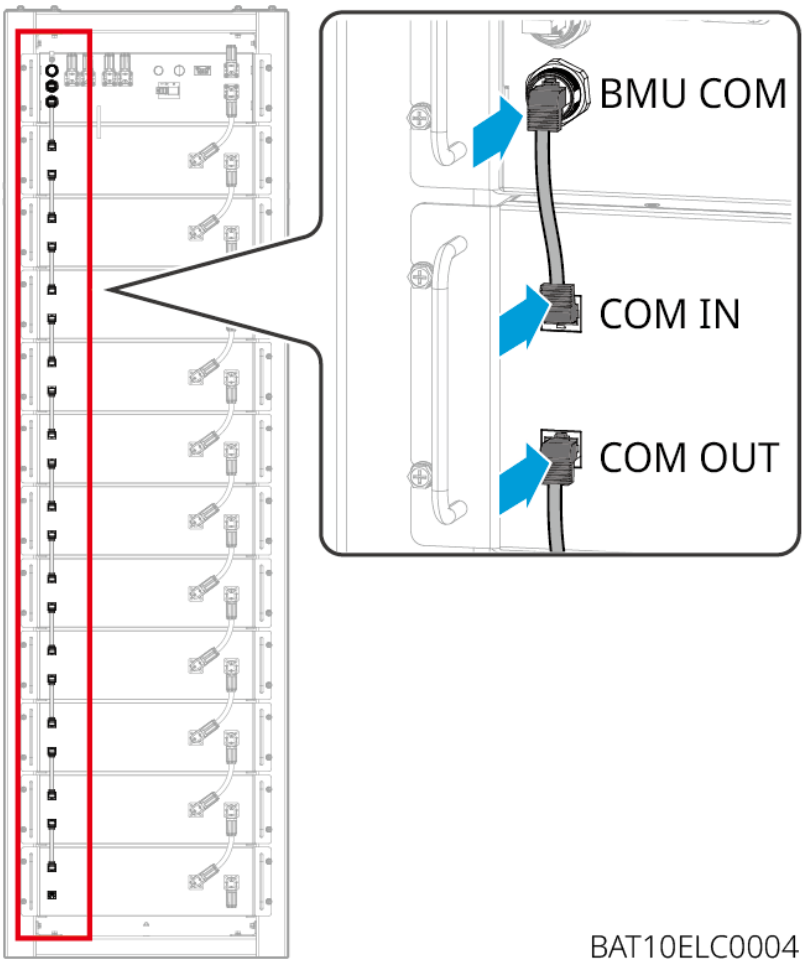

NOTICE
When connecting communication cables between battery PACKs, the COM OUT port of the bottommost PACK should not be connected, and there is no need to connect a terminal resistor!

5.6.3 BAT-C Series 61.4-112.6kWh Commercial & Industrial Battery System

Inverter	GW15K-ET	GW20K-ET	GW25K-ET	GW29.9K-ET	GW30K-ET
Number of BAT Ports	1	1	2	2	2

Inverter		GW15K-ET	GW20K-ET	GW25K-ET	GW29.9K-ET	GW30K-ET
With BAT 61.4kWh Battery System	Wiring Method	Connect to 1 BAT port	Connect to 1 BAT port	Connect to 2 BAT ports	Connect to 2 BAT ports	Connect to 2 BAT ports
	Can it be fully loaded?	Yes	No	Yes	Yes	Yes
With BAT 92.1kWh Battery System	Wiring Method	Connect to 1 BAT port	Connect to 1 BAT port	Connect to 2 BAT ports	Connect to 2 BAT ports	Connect to 2 BAT ports
	Can it be fully loaded?	Yes	Yes	Yes	Yes	Yes
With BAT 102.4kWh Battery System	Wiring Method	Connect to 1 BAT port	Connect to 1 BAT port	Connect to 1 BAT port	Connect to 2 BAT ports	Connect to 2 BAT ports
	Can it be fully loaded?	Yes	Yes	Yes	Yes	Yes
With BAT 112.6kWh Battery System	Wiring Method	Connect to 1 BAT port	Connect to 1 BAT port	Connect to 1 BAT port	Connect to 2 BAT ports	Connect to 2 BAT ports
	Can it be fully loaded?	Yes	Yes	Yes	Yes	Yes

5.6.3.1 Battery Wiring Port and System Wiring Introduction

⚠WARNING
All cut wire holes must be sealed with fireproof putty.

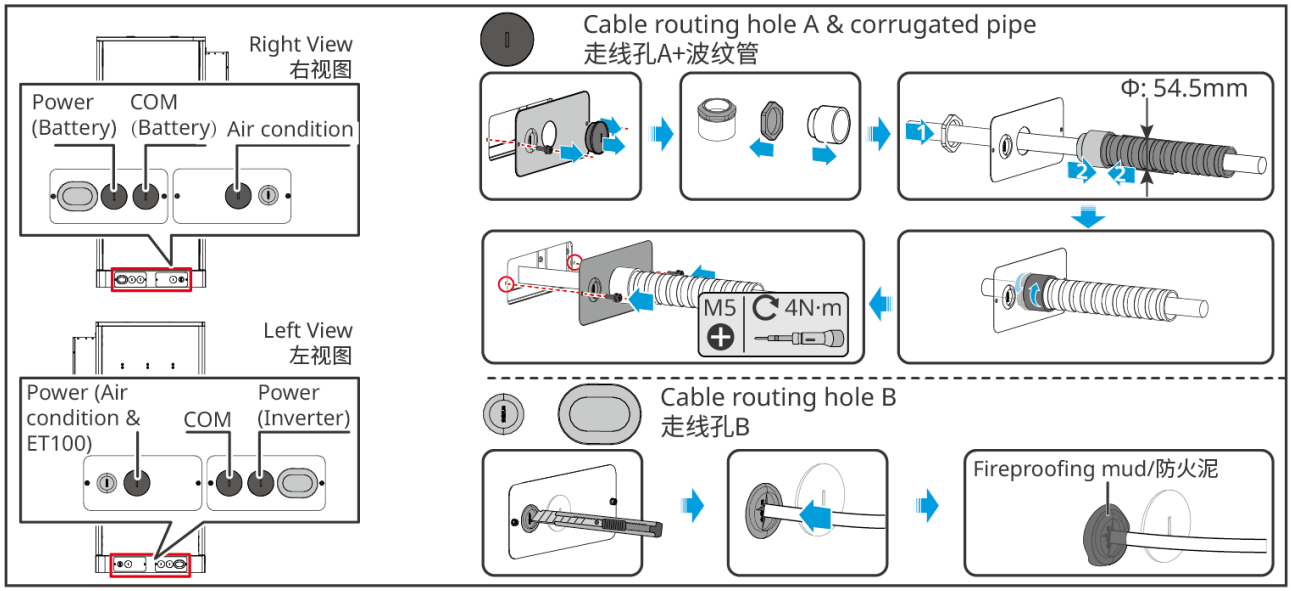

5.6.3.3 Connecting the Battery Communication Cable

NOTICE

- The battery system is shipped with a communication cable. Please use the communication cable provided in the package.
- The external communication port of the battery system is pre-installed with a terminal resistor upon factory shipment. If you need to connect a communication cable, please remove the terminal resistor. Retain the terminal resistor on any port not connected to a communication cable.

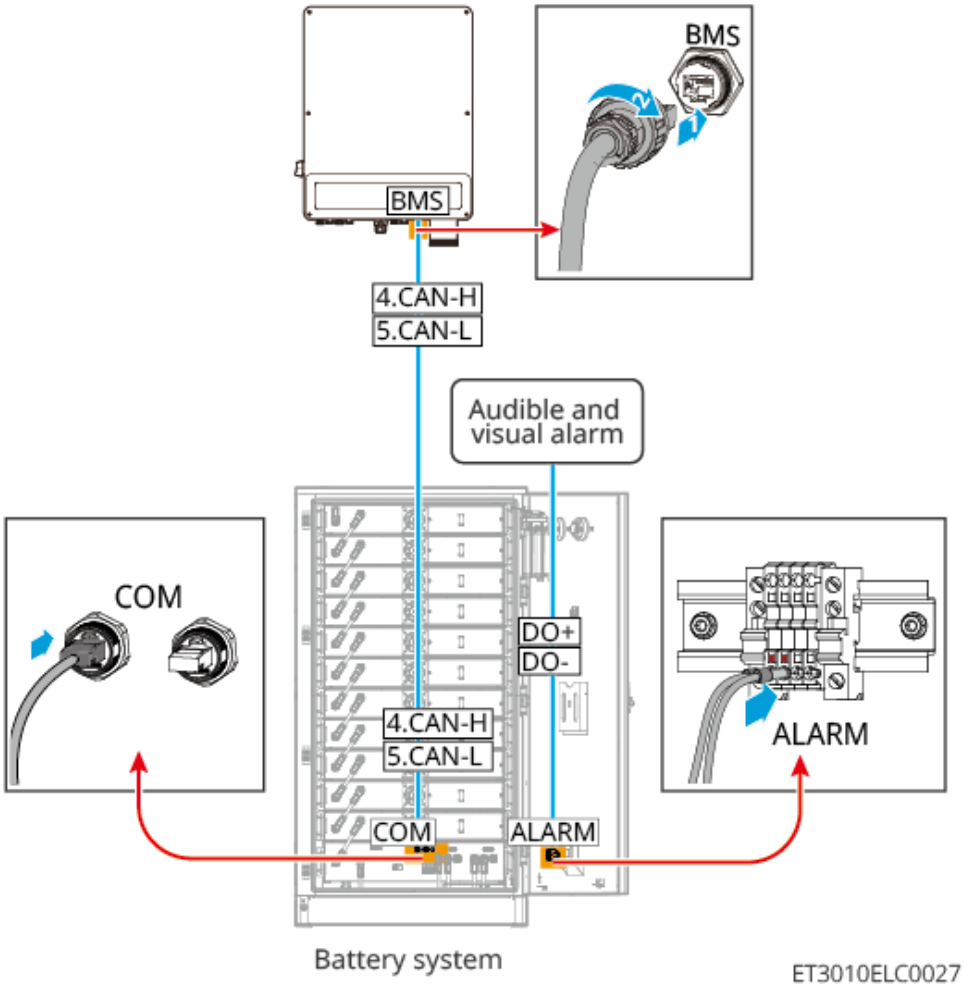

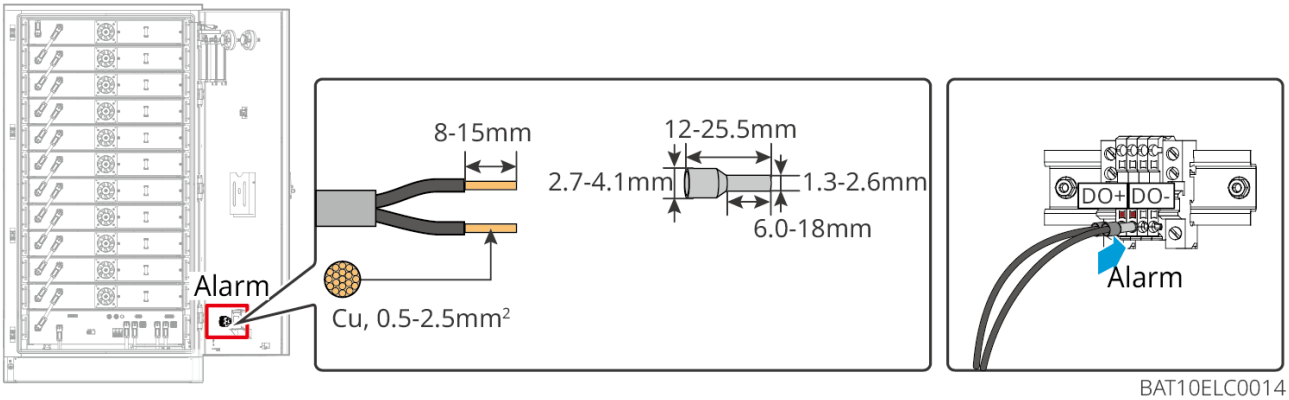

Instructions for BMS Communication Connection Between Inverter and Battery:

Port	Definition	Description
1-3，6-8	-	-
4	CAN_H	Communicate with inverter
5	CAN_L	

5.6.3.4 Connecting Battery Air Conditioning Cables

Wiring Steps:
Step 1: Make the air conditioning cable.
Step 2: Connect the cable to the air conditioning switch on the battery.
Step 3: Connect the cable directly to the distribution board or to the inverter's BACKUP port via the distribution board.

NOTICE
Please ensure that the voltage of the air conditioner power cord is 220V±15%, and the rated current is 12A.

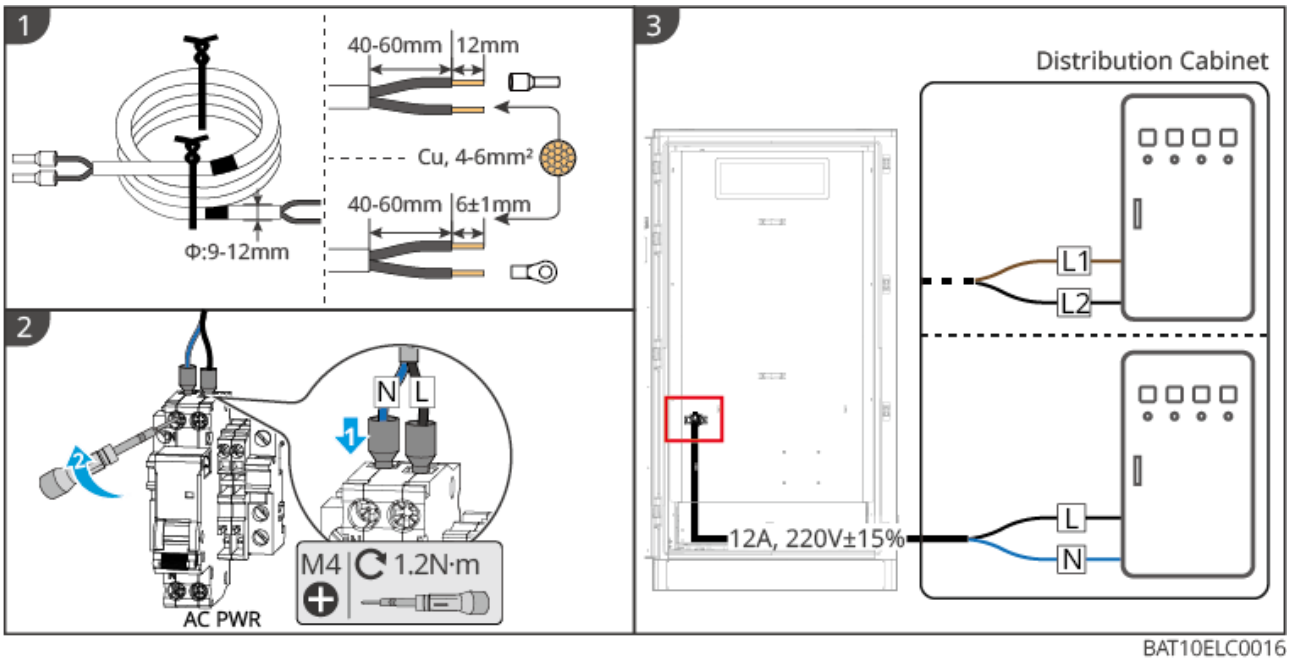

5.6.3.5 Install Base Plate and Release Emergency Stop Switch

After wiring is complete, please reinstall the battery bottom cover along the original path, and rotate right to release the emergency stop switch.

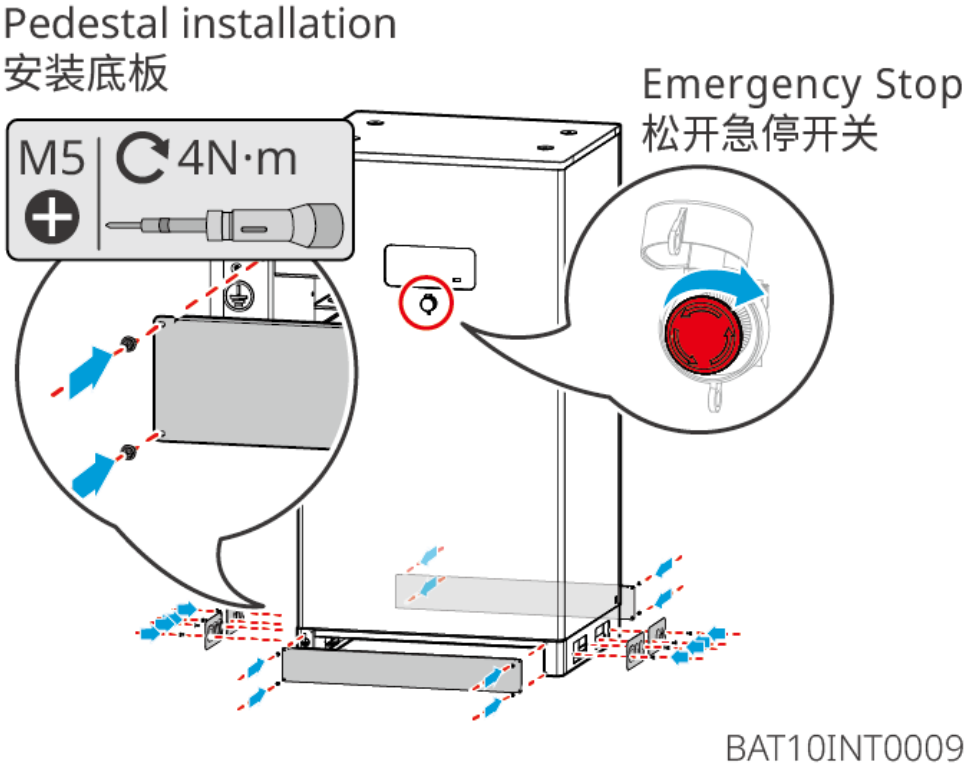

5.7 Connecting the AC Cable

WARNING

- The inverter internally integrates a Residual Current Monitoring Unit (RCMU) to prevent residual current from exceeding the specified value. When the inverter detects a leakage current greater than the allowable value, it will quickly disconnect from the grid or generator.
- During wiring, ensure that the AC wires match the “L1”, “L2”, “L3”, “N”, and “PE” ports of the AC terminals exactly. If the cables are connected incorrectly, it may cause equipment damage.
- Ensure that the wire cores are fully inserted into the terminal connection holes without exposure.
- Ensure that the insulation plate at the AC terminals is tightly secured without looseness.
- Ensure that the cable connections are tight; otherwise, during equipment operation, it may cause the terminal blocks to overheat and result in equipment damage.

Type one:

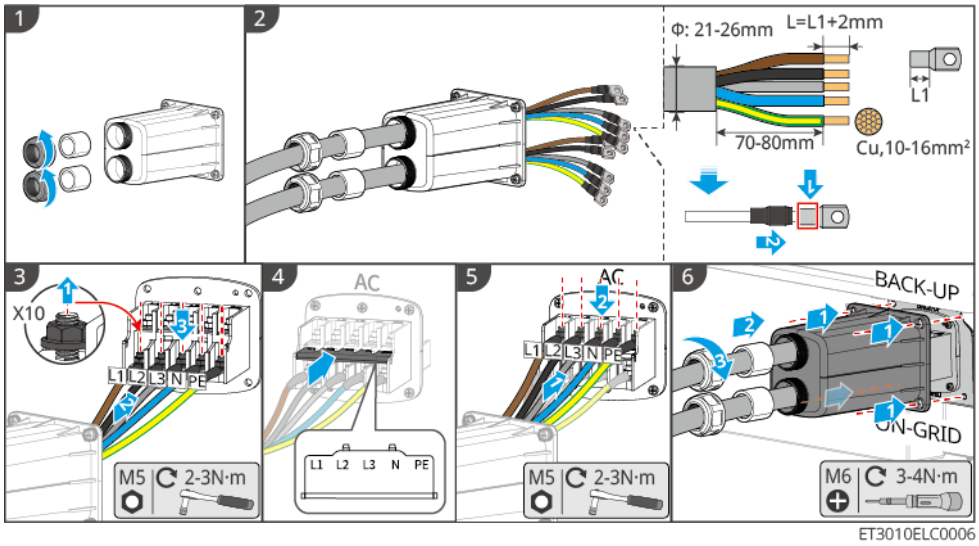

Type two:

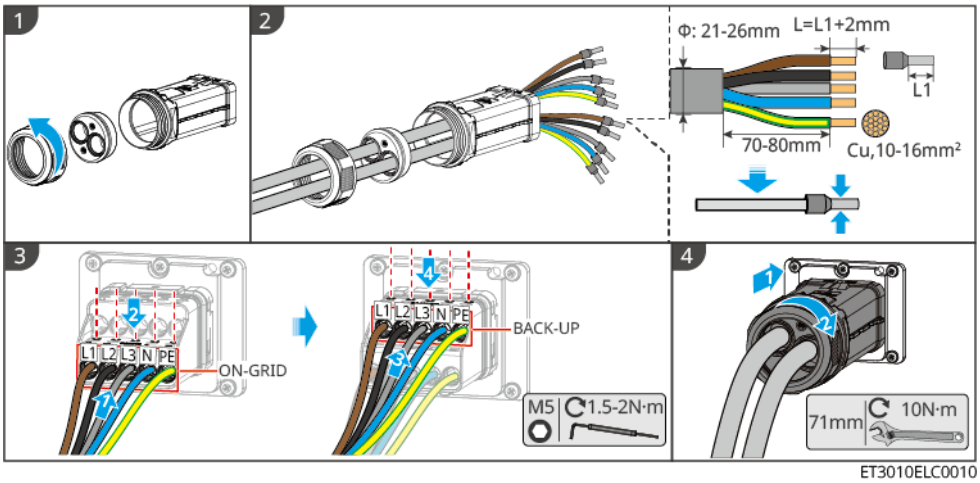

5.8 Connecting the Meter Cable

NOTICE

- The meter shipped with the unit is for use with a single inverter only. Do not connect one meter to multiple inverters. If you have multiple inverters, please consult the manufacturer to purchase additional meters separately.
- Ensure the CT connection direction and phase sequence are correct; otherwise, it may lead to incorrect monitoring data.
- Ensure all cable connections are correct, secure, and not loose. Improper wiring may cause poor contact or damage the meter.
- In areas with lightning risk, if the meter cable length exceeds 10m and the cable is not routed using a grounded metal conduit, it is recommended to install an external lightning protection device.

GM3000 Meter Wiring

NOTICE

- The outer diameter of the AC power line must be smaller than the aperture of the CT to ensure the AC power line can pass through the CT.
- To ensure the current detection accuracy of the CT, the recommended length of the CT cable does not exceed 30m.
- Do not use network cable as the CT cable, as excessive current may cause damage to the meter.
- The size and appearance of the CT provided by the equipment manufacturer may vary slightly depending on the model, but the installation and wiring methods are the same.

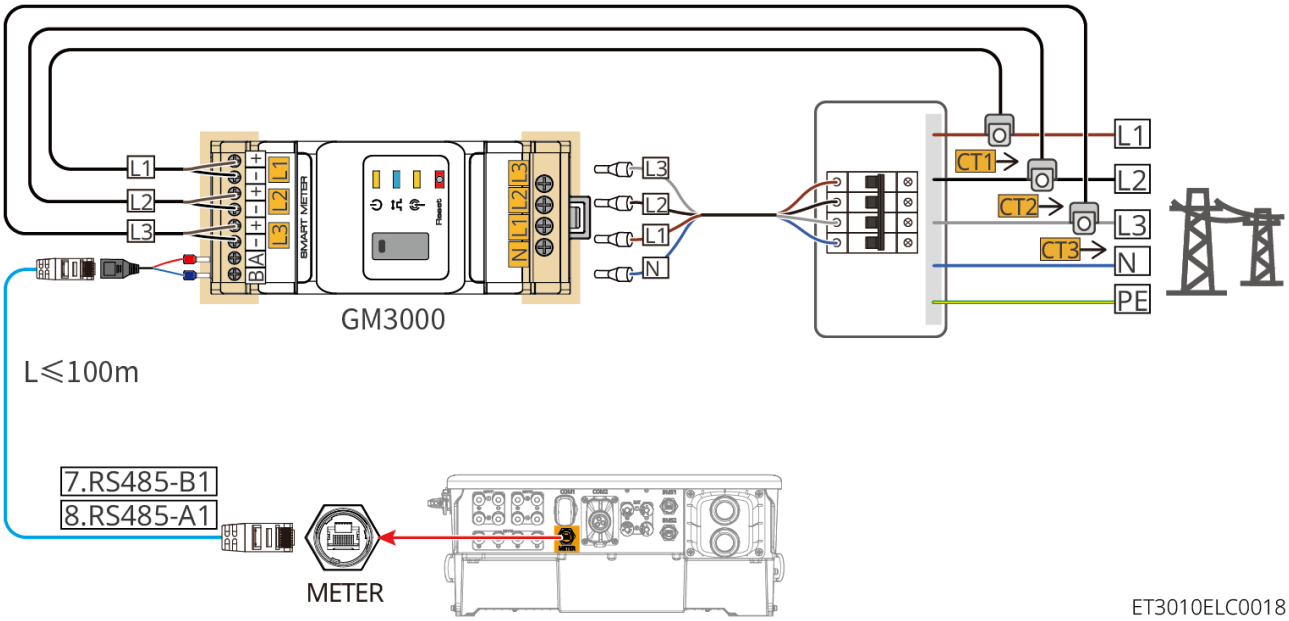

Wiring Steps

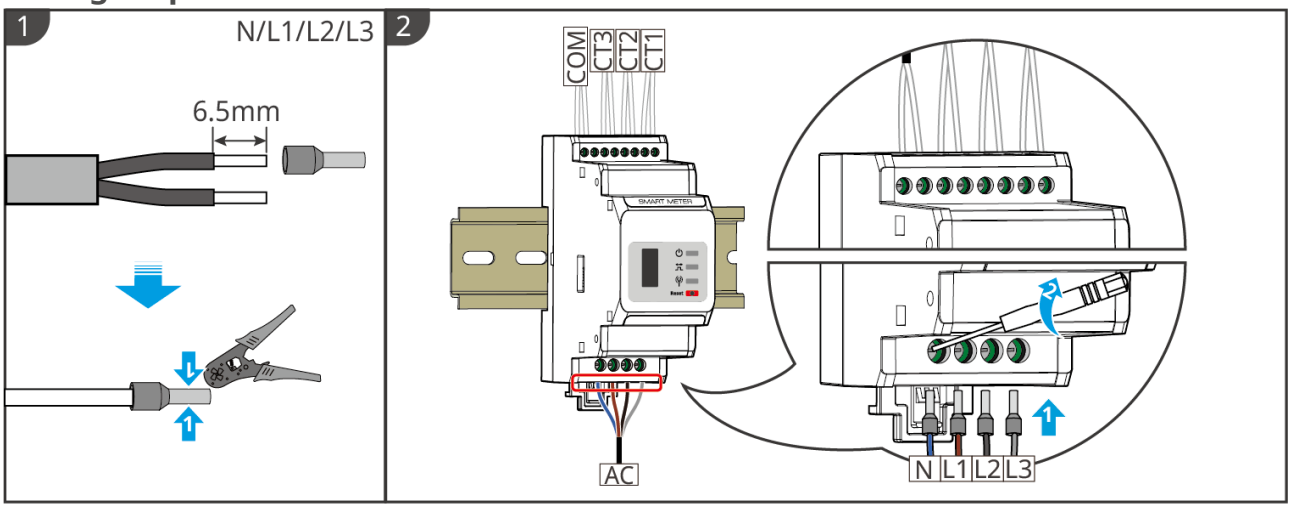

GM330&GMK330 Meter Wiring

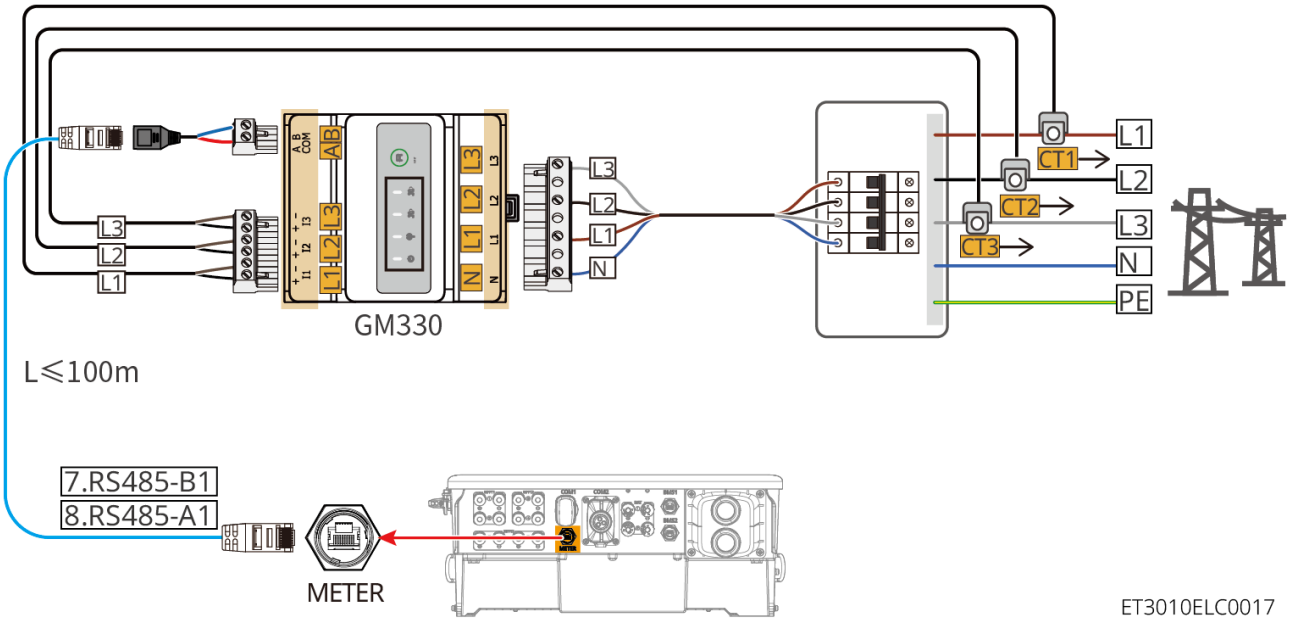

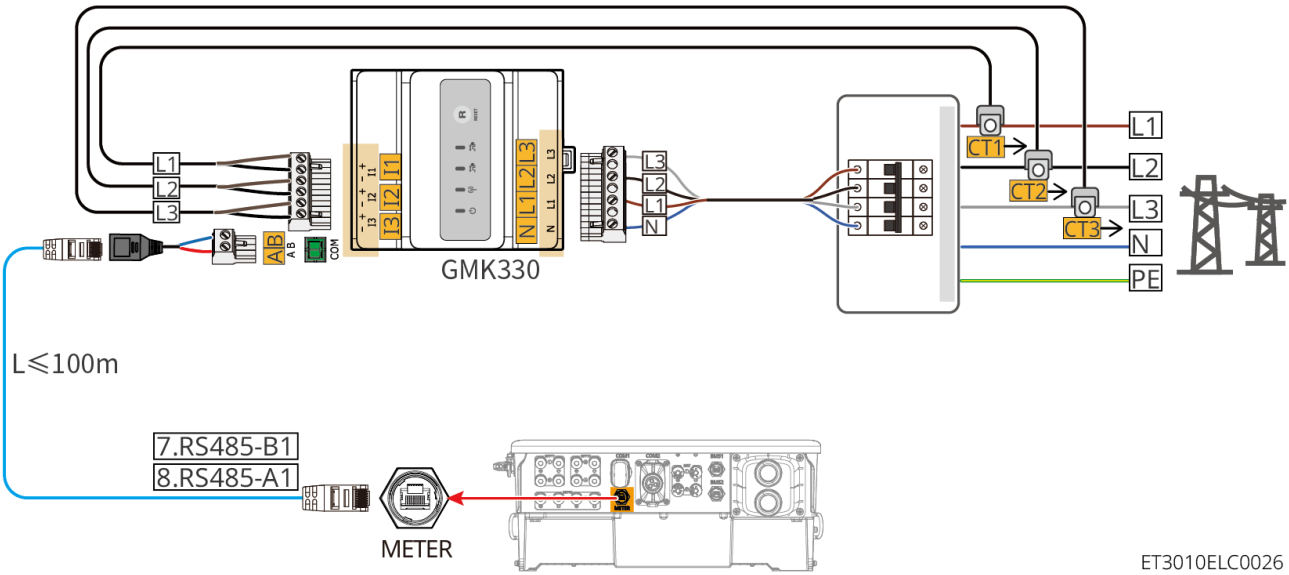

Wiring Steps

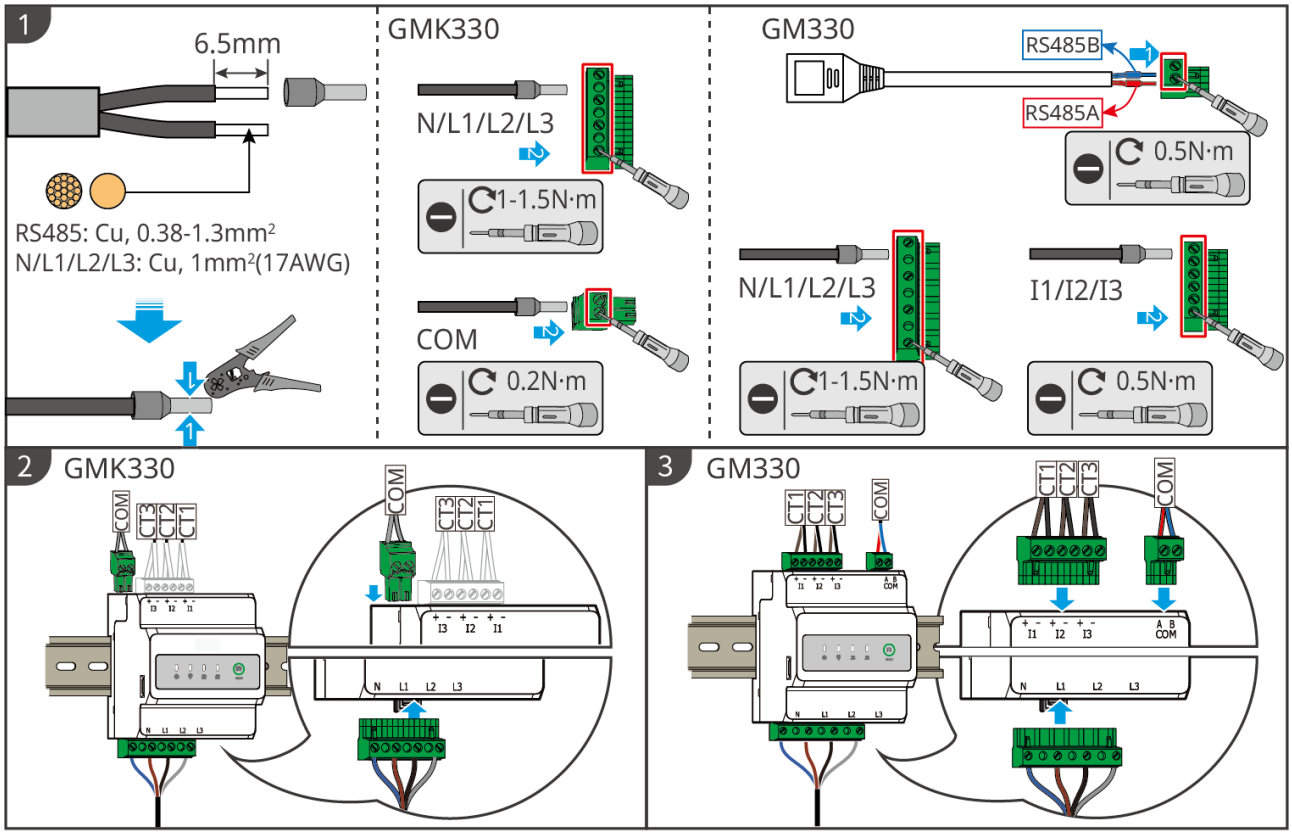

GMK10ELC0027

Install CT (Type 1)

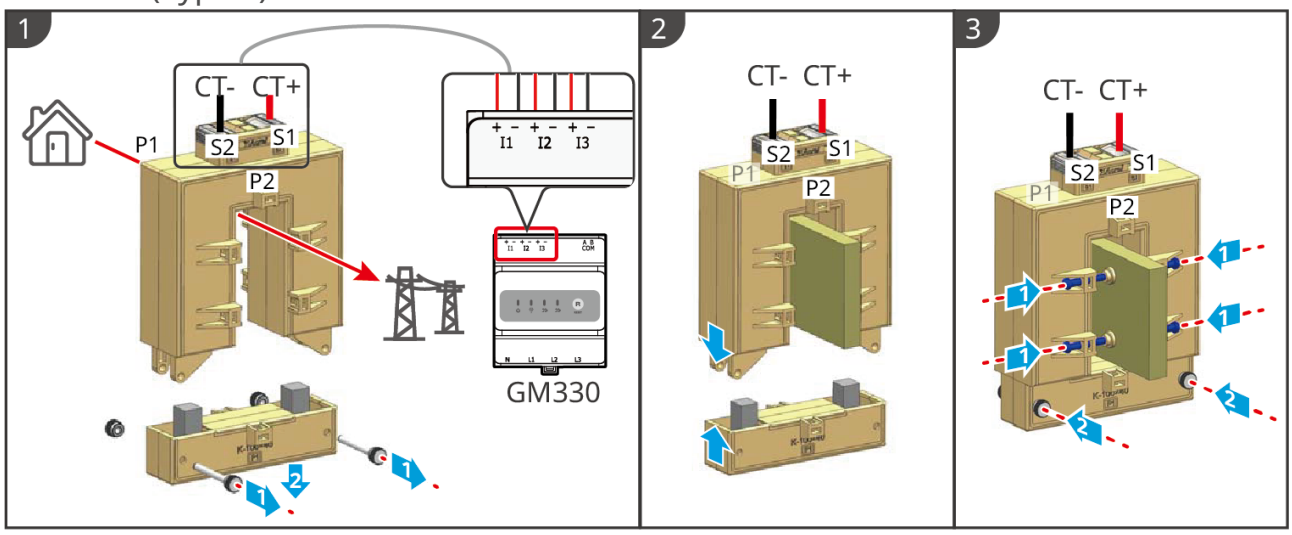

GMK10ELC0006

Install CT (Type 2)

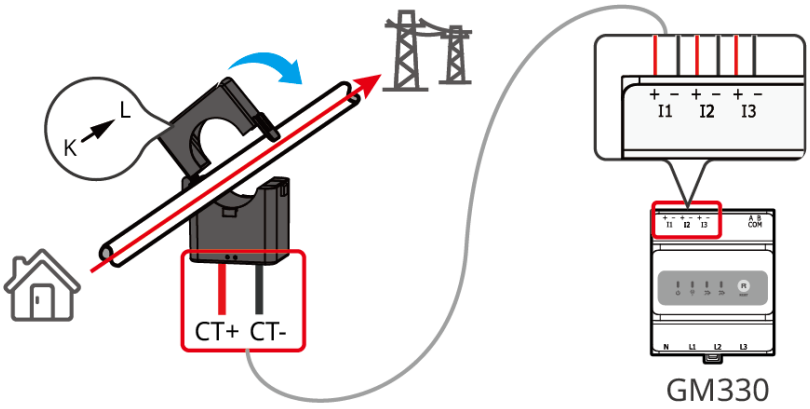

GMK10ELC0007

5.9 Connecting the Inverter Communication Cable

NOTICE

- To ensure the meter and CT can function properly, please ensure the following:
  - Ensure the CT is connected to the matching phase line: CT1 to L1, CT2 to L2, CT3 to L3.
  - Connect according to the direction indicated on the CT; otherwise, it may cause a CT reverse fault.
  - When replacing or maintaining the CT later, use the "Meter/CT - Auxiliary Detection" function in the SolarGo APP to allow the Inverter to readapt to the CT sampling current direction.
- To use the DRED, RCR, or remote shutdown function, please enable this function in the SolarGo APP after wiring is completed.
- If the Inverter is not connected to a DRED device or remote shutdown device, do not enable this function in the SolarGo APP; otherwise, the Inverter will not be able to operate in grid-connected mode.
- In a parallel system, to implement DRED or RCR functions, only connect the DRED/RCR communication cable to the master Inverter.
- The Inverter's DO signal communication port can connect to dry contact signals with specifications: Max≤24Vdc, 1A.
- The Inverter supports connecting to a mobile phone or WEB interface via 4G, Bluetooth, WiFi, or LAN communication methods to set device parameters, view device operation information and error messages, and stay informed of the system status in a timely manner.
- In a single-unit system, the installation of a WiFi/LAN Kit-20 or 4G Kit-CN-G20

NOTICE

smart communication stick is supported.

- In a parallel system, both the master and slave Inverters require the installation of a WiFi/LAN Kit-20 smart communication stick for networking.
- When using the 4G Kit-CN-G20:
  - If parallel unit networking is required, please contact GoodWe to purchase the WiFi/LAN Kit-20.
  - In China, a standard Micro-SIM card is provided, with China Mobile as the carrier. Please confirm the device is installed in an area with carrier signal coverage. If local China Mobile signal is not covered, please contact the carrier to optimize the signal.
  - Supports connection to third-party monitoring platforms via the MQTT communication protocol.
- The 4G Kit-CN-G20 is an LTE single-antenna device suitable for application scenarios with lower requirements for data transmission rates.
- To use dual meters for grid-connected unit generation monitoring and load consumption monitoring, please use an RJ45 splitter for connection. Prepare the RJ45 splitter yourself or contact GoodWe to purchase one.
- To maintain the Inverter's waterproof rating, do not remove the waterproof plugs from unused communication ports on the Inverter.
- The Inverter's communication functions are optional; please select according to the actual usage scenario.

Type One

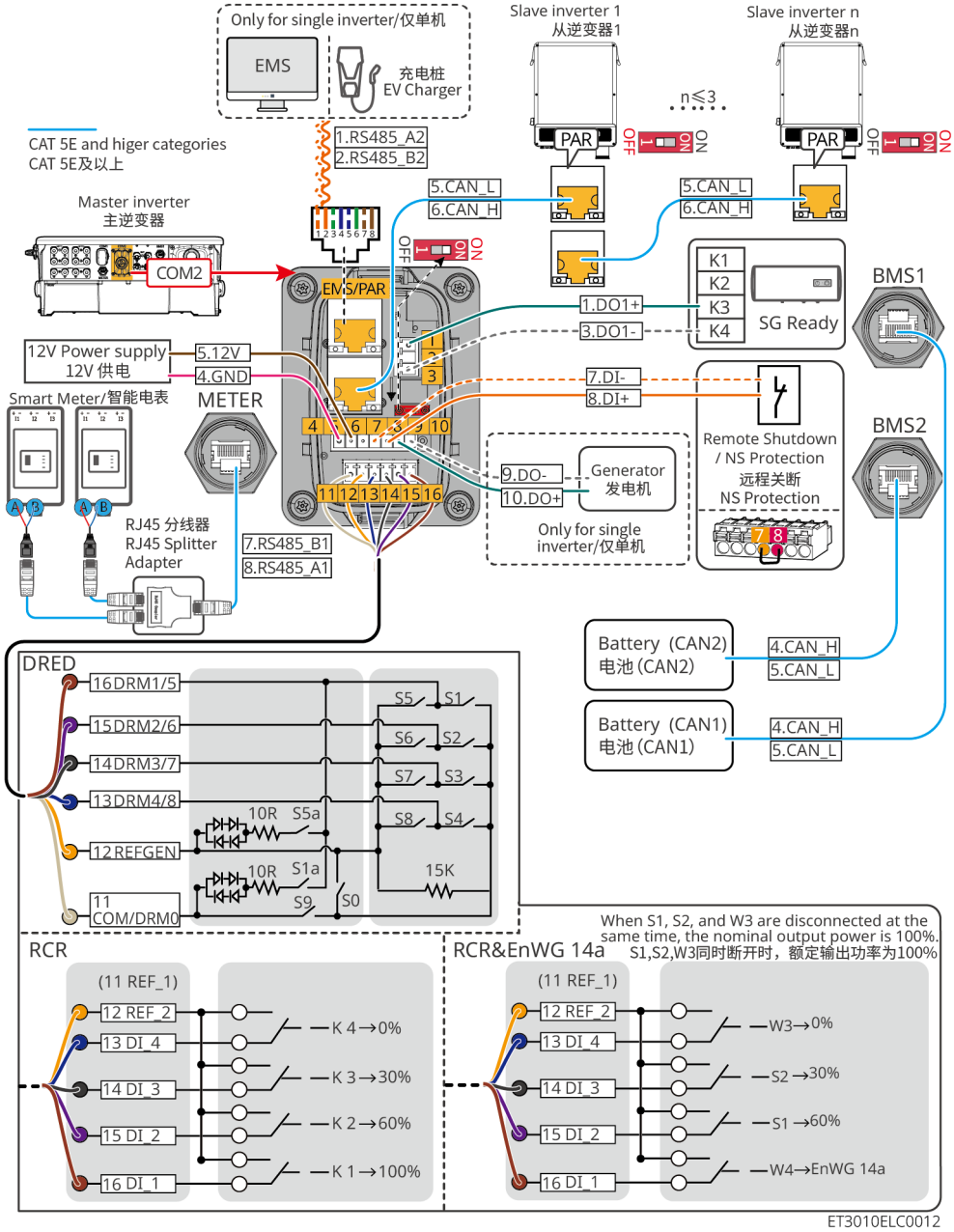
Only for single inverter/仅单机
EMS
充电桩
EV Charger
Slave inverter 1
从逆变器1
Slave inverter n
从逆变器n
n≤3
PAR
OFF
ON
CAT 5E and higer categories
CAT 5E及以上
1.RS485_A2
2.RS485_B2
5.CAN_L
6.CAN_H
Master inverter
主逆变器
COM2
EMS/PAR
K1
K2
K3
K4
SG Ready
BMS1
1.DO1+
3.DO1-
12V Power supply
12V 供电
5.12V
4.GND
7.DI-
8.DI+
Smart Meter/智能电表
METER
Remote Shutdown
/ NS Protection
远程关断
NS Protection
BMS2
9.DO-
10.DO+
Generator
发电机
Only for single
inverter/仅单机
RJ45 分线器
RJ45 Splitter
Adapter
7.RS485_B1
8.RS485_A1
Battery (CAN2)
电池(CAN2)
4.CAN_H
5.CAN_L
Battery (CAN1)
电池(CAN1)
DRED
16DRM1/5
15DRM2/6
14DRM3/7
13DRM4/8
12REFGEN
11
COM/DRM0
10R
S5a
S1a
S9
S0
15K
When S1, S2, and W3 are disconnected at the
same time, the nominal output power is 100%.
S1,S2,W3同时断开时，额定输出功率为100%
RCR
(11 REF_1)
12 REF_2
13 DI_4
14 DI_3
15 DI_2
16 DI_1
K 4→0%
K 3→30%
K 2→60%
K 1→100%
RCR&EnWG 14a
W3→0%
S2 →30%
S1 →60%
W4→EnWG 14a
ET3010ELC0012

Type Two

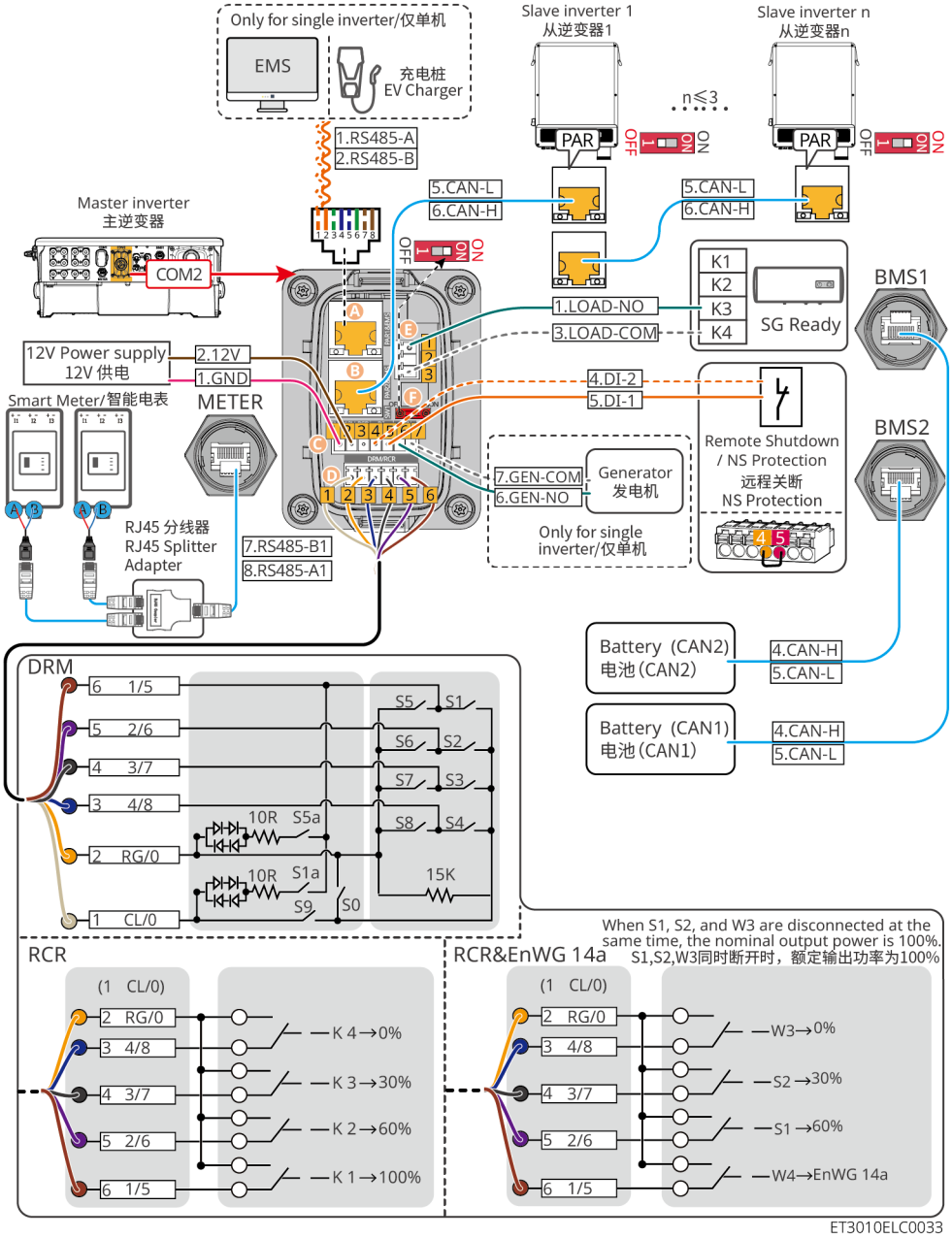
Only for single inverter/仅单机
EMS
充电桩
EV Charger
1.RS485-A
2.RS485-B
Slave inverter 1
从逆变器1
Slave inverter n
从逆变器n
n≤3
PAR
OFF
ON
5.CAN-L
6.CAN-H
Master inverter
主逆变器
COM2
K1
K2
K3
K4
SG Ready
BMS1
1.LOAD-NO
3.LOAD-COM
12V Power supply
12V 供电
2.12V
1.GND
4.DI-2
5.DI-1
Smart Meter/智能电表
METER
Remote Shutdown
/ NS Protection
远程关断
NS Protection
BMS2
7.GEN-COM
6.GEN-NO
Generator
发电机
Only for single
inverter/仅单机
RJ45 分线器
RJ45 Splitter
Adapter
7.RS485-B1
8.RS485-A1
Battery (CAN2)
电池(CAN2)
4.CAN-H
5.CAN-L
Battery (CAN1)
电池(CAN1)
DRM
6 1/5
5 2/6
4 3/7
3 4/8
2 RG/0
1 CL/0
10R
S5a
S1a
S9
S0
S5
S1
S6
S2
S7
S3
S8
S4
15K
When S1, S2, and W3 are disconnected at the
same time, the nominal output power is 100%.
S1,S2,W3同时断开时，额定输出功率为100%
RCR
(1 CL/0)
K 4→0%
K 3→30%
K 2→60%
K 1→100%
RCR&EnWG 14a
W3→0%
S2 →30%
S1 →60%
W4→EnWG 14a
ET3010ELC0033

Silkscreen	Function	Description
DO / LOAD	load control（SG Ready）	• Supports connection of dry contact signals to achieve functions like load control. The DO contact capacity is 24V DC@1A, NO/COM normally open contact. • Supports SG Ready heat pump connection, controlling the heat pump via dry contact signals. • Supported operating modes: ◦ Operating mode 2 (Signal: 0:0): Energy-saving Mode, in this mode, the heat pump operates in energy-saving mode. ◦ Operating mode 3 (Signal: 0:1): Activation suggestion, in this mode, the heat pump increases hot water reserve to store heat while maintaining current operation.
GND 12V RSD	12V Power Supply	The inverter provides a 12V power supply port, supporting devices up to 5W. This port has short-circuit Protection Function.
DI	Remote Shutdown/NS Protection	Provides a signal control port for Remote Shutdown of the device or to implement NS Protection Function. Remote Shutdown function: • Can control the device to stop working when an unexpected event occurs. • The remote shutdown device must be a normally closed type switch. • When the inverter uses the RCR or DRED function, ensure the remote shutdown device is connected, or the remote shutdown port is short-circuited.

Silkscreen	Function	Description
DO2 / GEN	Generator Start/Stop Control Port	• Only supports connection of generator control signals in single inverter scenarios. • The generator control mode is off by default, with the dry contact signal open; after enabling the control mode, the dry contact signal becomes shorted.
DRM&RCR /	RCR, DRED, or EnWG 14a Function Connection Port	• RCR (Ripple Control Receiver): Provides an RCR signal control port to meet grid dispatch requirements in regions like Germany. • DRED (Demand Response Enabling Device): Provides a DRED signal control port to meet DERD certification requirements in regions like Australia. • EnWG (Energy Industry Act) 14a: All controllable loads must accept emergency dimming from the grid. Grid operators can temporarily reduce the maximum grid purchase power of controllable loads to 4.2kW.
EMS/PAR/PAR-1/PAR1&EMS	• EMS Communication or Charging Pile Communication Port • Parallel Communication Port	• CAN and BUS port: Parallel communication port. CAN communication is used to connect to other inverters in parallel networking; the BUS bus is used to control the on-grid/off-grid status of each inverter in the parallel system. • RS485 port: Used to connect third-party EMS devices and charging piles. Connecting third-party EMS devices and charging piles is not supported in parallel scenarios.

Silkscreen	Function	Description
EMS/PAR / PAR1&EMS / PAR2&EMS	Parallel Communication Port	• CAN and BUS port: Parallel communication port. CAN communication is used to connect to other inverters in parallel networking; the BUS bus is used to control the on-grid/off-grid status of each inverter in the parallel system.
S1	Parallel DIP Switch	Inverter parallel DIP switch, factory default is set to the ON position. In multi-unit parallel scenarios, the parallel DIP switches of the first and last inverters must be set to the ON position, and the others to the 1 position.
METER	Smart Meter Connection Port	Connects to a smart meter to achieve output power control, load monitoring, and other functions.
BMS1 / BMS2	Battery Communication Connection Port	Connects to batteries using CAN communication. GW12KL-ET, GW15K-ET, GW20K-ET: 1 GW18KL-ET, GW25K-ET, GW29.9K-ET, GW30K-ET: 2

Method for Connecting the Communication Cable

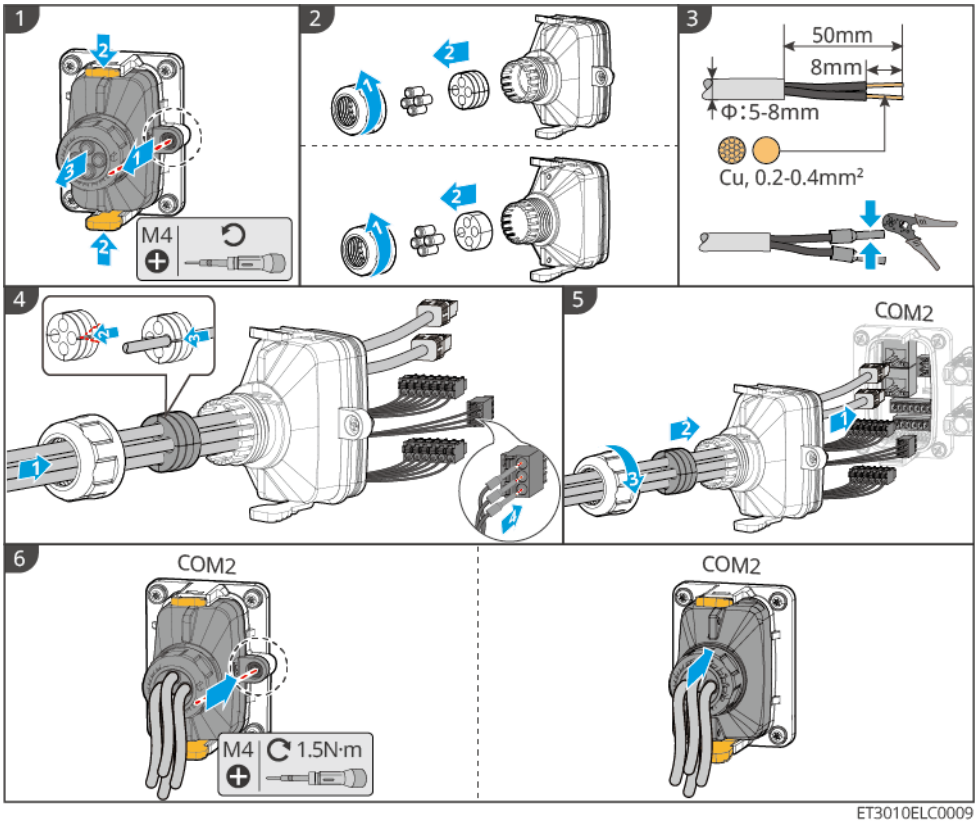

5.10 Connecting the Smart Communication Stick

NOTICE

- The inverter supports connection via Bluetooth, 4G, WiFi, LAN smart dongle to a mobile phone or WEB interface for setting device parameters, viewing device operation information and error messages, and staying updated on system status.
- When multiple inverters are networked in a system, the master inverter requires the installation of an Ezlink3000 smart dongle for networking.
- For an energy storage system with a single inverter, you can use a WiFi-Kit, WiFi/LAN Kit-20, or 4G smart dongle.
- When using the WiFi communication method to connect the inverter to a router, you can install a WiFi-Kit, WiFi/LAN Kit-20, or Ezlink3000 smart dongle.
- When using the LAN communication method to connect the inverter to a router, you can install a WiFi/LAN Kit-20 or Ezlink3000 smart dongle.
- When using the 4G communication method to upload energy storage system operation information to the monitoring platform, you can install an LS4G Kit-CN, 4G Kit-CN, 4G Kit-CN-G20, or 4G Kit-CN-G21 smart dongle. When using LS4G Kit-CN or 4G Kit-CN, you need to use the smart dongle shipped with the inverter to configure the parameters of the energy storage system. After configuration is complete, replace it with the LS4G Kit-CN or 4G Kit-CN for data transmission. When using 4G Kit-CN-G20 or 4G Kit-CN-G21, please use the Bluetooth signal emitted by the module for local device configuration.
- The 4G module is an LTE single-antenna device, suitable for application scenarios with low data transmission rate requirements.
- The built-in SIM card in the 4G module is a mobile communication card. Please confirm whether the device is installed in an area covered by China Mobile's 4G signal.
- After installing the 4G Kit-CN-G20 or 4G Kit-CN-G21 communication dongle, please contact the after-sales service center to bind the inverter with the communication dongle. After binding, if you need to install the communication dongle on another inverter, please contact the after-sales service center to unbind it first.
- To ensure 4G signal communication quality, do not install the device indoors or in areas with metal interference signals.

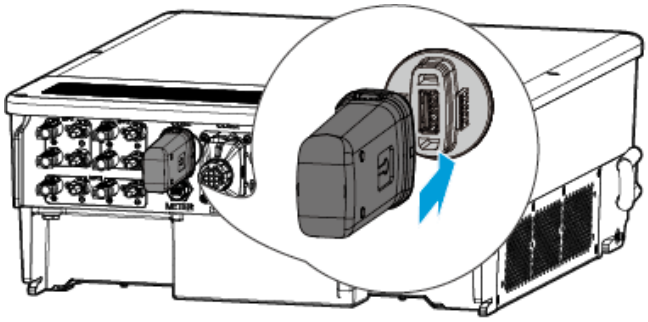

ET3010ELC0034

6 System Commissioning

6.1 Check Before Power ON

No.	Check Item
1	The equipment is installed securely, the installation location facilitates operation and maintenance, the installation space allows for ventilation and heat dissipation, and the installation environment is clean and tidy.
2	PE cable, DC cable, AC cable, Communication cable, and terminal resistor connections are correct and secure.
3	Cable bundling meets wiring requirements, is reasonably distributed, and shows no damage.
4	For unused cable entry holes and ports, ensure they are reliably connected using the terminals provided with the accessories and have been sealed.
5	Ensure used cable entry holes have been sealed.
6	The voltage and frequency at the inverter grid connection point meet the grid connection requirements.

6.2 Power ON

⚠WARNING

- When multiple inverters are connected in parallel, ensure that the AC power is turned on for all slave inverters within one minute after the AC power is turned on for the master inverter.
- When multiple battery systems are connected in a cluster, ensure that the QF2 switches for all battery systems are closed within five minutes.
  When multiple battery systems are connected in a cluster, before closing QF1, ensure that the SolarGo App correctly displays the number of battery systems in the cluster; otherwise, it may cause damage to the battery system.

NOTICE

When there is no PV power generation in the photovoltaic system and the grid is abnormal, if the inverter cannot operate normally, the battery black start function can be used to force the battery to discharge and start the inverter. The inverter can then enter off-grid mode, with the battery supplying power to the loads.

- BAT series 92.1-112.6kWh commercial & industrial battery system black start procedure, refer to the power on/off steps.
- The black start procedure for other batteries is the same as the power-on steps.

BAT series 92.1-112.6kWh commercial & industrial battery system: Before performing the power-on operation, ensure the battery's emergency stop switch is in the released state. Release procedure: Rotate the emergency stop switch to the right.

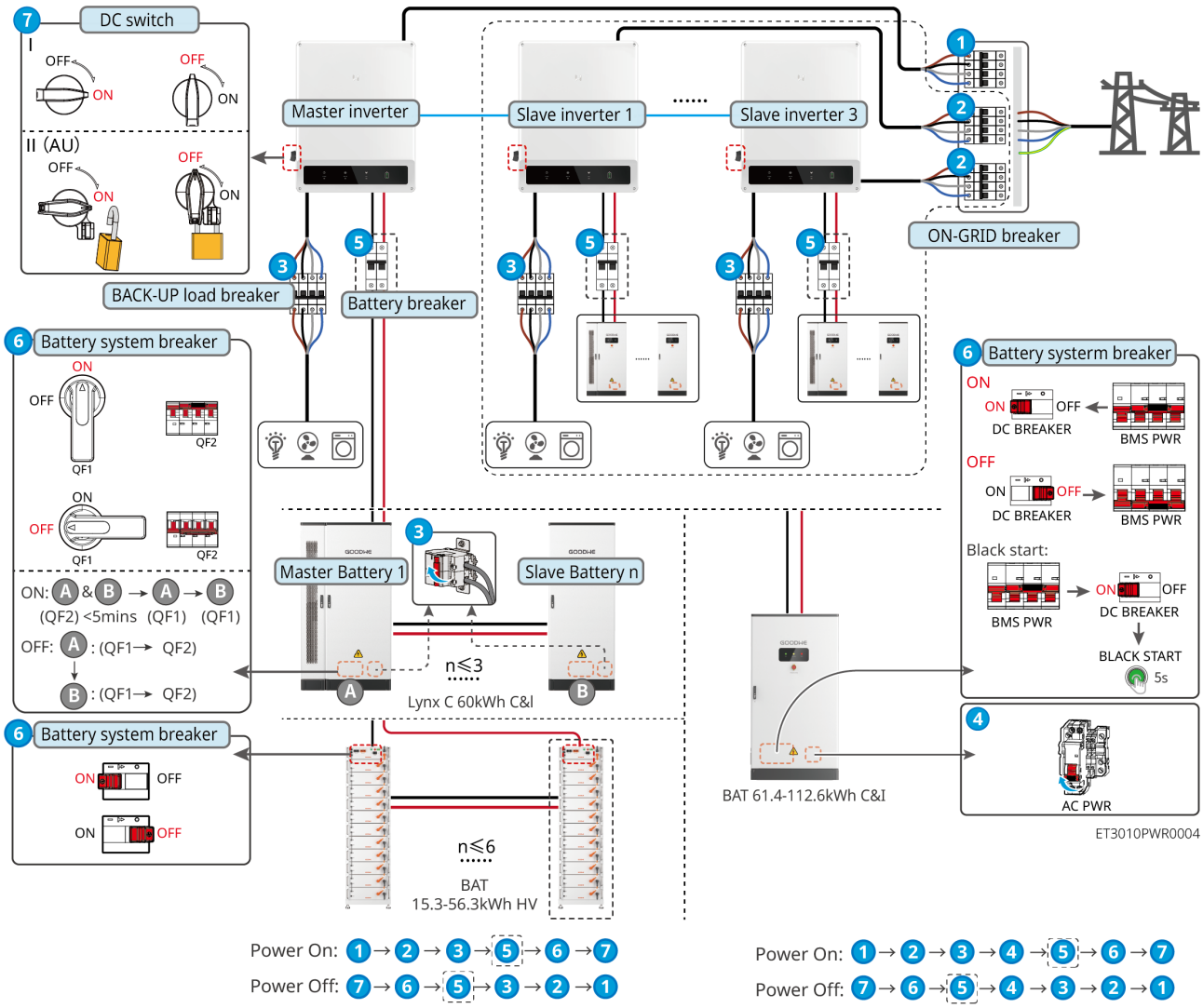

⑤ : Optional based on local laws and regulations.

6.3 Indicators

6.3.1 Inverter Indicators

Indicator	Status	Description
		The inverter is powered on and in standby mode.
		The inverter is starting up and in self-test mode.
		The inverter is operating normally in grid-connected power generation or off-grid mode.
		BACK-UP output overload.

Indicator	Status	Description
		System fault.
		The inverter is powered off.
		Grid abnormal, inverter BACK-UP port power supply normal.
		Grid normal, inverter BACK-UP port power supply normal.
		No power supply at the BACK-UP port.
		Inverter monitoring module is resetting.
		No connection established between the inverter and the communication terminal.
		Communication failure between the communication terminal and the cloud server.
		Inverter monitoring is normal.
		Inverter monitoring module is not started.

6.3.2 Battery Indicators

- **Lynx C Series 60kWh Commercial & Industrial Battery System**

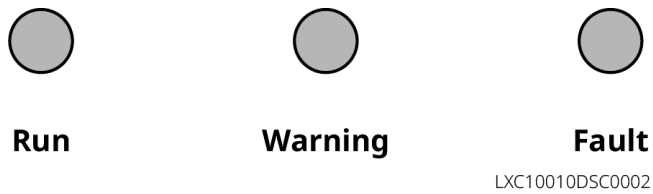

indicator	Status	Description
Run		Steady green: Device operating normally
		Single green blink: Battery operating normally, not communicating with inverter
		Two green blinks: Device in standby
		Green off, steady yellow: Device alarm Green off, Steady red: Device fault Green, yellow, and red all off: Device not powered on

indicator	Status	Description
Warning		Steady on: Device alarm
		Off: No device alarm
Fault		Steady on: Device fault
		Off: No device fault

- **BAT-S Series 15.3-56.3kWh High Voltage Battery**

Indicator	Status	Description
RUN		Solid green light: Device operating normally
		Single green flash: Battery operating normally, not communicating with the inverter
		Two green flashes: Device in standby
FAULT		Solid light: Device fault
		Single red flash: System undervoltage level 3~4
		Two red flashes: SN abnormality

- **BAT-C Series 61.4-112.6kWh Commercial & Industrial Battery System**

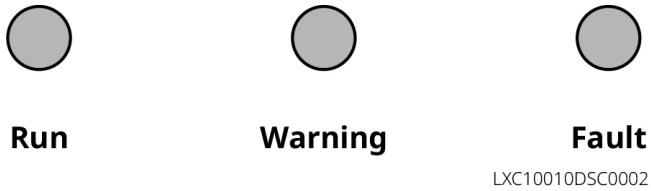

Indicator	Status	Description
Run		Steady green light: Device operating normally
		Single flash of green light: Battery operating normally, not communicating with inverter
		Double flash of green light: Device in standby
		Green light off, steady yellow light: Device warning Green light off, steady red: Device fault Green, yellow, and red lights all off: Device not powered on
Warning		Steady light: Device warning
		Off: No device warning
Fault		Steady light: Device fault
		Off: No device fault
		Single red flash: Sleep (under-voltage)

6.3.3 Smart Meter Indicator

GM330&GMK330

Type	Status	Description
Power Light	Constantly lit	The meter is powered on, no RS485 communication
	Flashing	The meter is powered on, RS485 communication is normal
	Off	The meter is powered off
Communication Light	Off	Reserved
	Flashing	Press the Reset button for ≥5s, Power Light and Buy/Sell Power Light flash: Meter reset
	Constantly lit	buy power from the grid
	Flashing	Selling power to the grid

Type	Status	Description
Buy/Sell Power Light	Off	Not buying or selling power
	Reserved	

GM3000

Type	Status	Description
Power Light	Constantly lit	The meter is powered on
	Off	The meter is powered off
Buy/Sell Light	Constantly lit	buy power from the grid
	Flashing	Selling power to the grid
Communication Light	Flashing	Normal communication
	Flashes 5 times continuously	• Press the Reset button for <3s: Meter reset • Press the Reset button for 5s: Meter parameters restored to factory settings • Press the Reset button for >10s: Meter parameters restored to factory settings, and energy data cleared
	Off	No communication from the meter

6.3.4 Smart Dongle Indicator

- **Wi-Fi Kit**

Indicator	Color	State	Description
	Green	On	Wi-Fi Kit is powered on.

Power indicator		Off	Wi-Fi Kit is not powered on or is rebooting.
Communication indicator	Blue	On	WiFi AP hotspot is connected.
		Off	• Wi-Fi Kit communication is abnormal. • Wi-Fi Kit is rebooting.

- **WiFi/LAN Kit-20**

NOTICE
• After double-clicking the Reload button to turn on Bluetooth, the communication indicator will switch to a single-flash state. Please connect to the SolarGo APP within 5 minutes, otherwise Bluetooth will automatically turn off. • The single-flash state of the communication indicator only occurs after double-clicking the Reload button to turn on Bluetooth.

Indicator	Status	Description
Power Light		Steady on: The Smart Communication Stick is powered on.
		Off: The Smart Communication Stick is not powered on.
Communication Light		Steady on: Communication is normal in WiFi mode or LAN mode.
		Single flash: The Smart Communication Stick's Bluetooth signal is on, waiting to connect to the SolarGo app.
		Double flash: The Smart Communication Stick has not connected to the router.

Indicator	Status	Description
		Quadruple flash: The Smart Communication Stick communicates normally with the router but has not connected to the server.
		Sextuple flash: The Smart Communication Stick is identifying connected devices.
		Off: The Smart Communication Stick is undergoing a software reset or is not powered on.

Indicator	Color	Status	Description
LAN port communication light 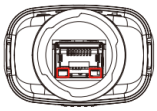	Green	Steady on	100Mbps wired network connection is normal.
		Off	• The network cable is not connected. • 100Mbps wired network connection is abnormal. • 10Mbps wired network connection is normal.
	Yellow	Steady on	10/100Mbps wired network connection is normal, with no communication data being sent or received.
		Flashing	Communication data is being sent or received.
		Off	The network cable is not connected.

Button	Description
Reload	Hold for 0.5 to 3 seconds, the smart communication stick will reset.
	Hold for 6 to 20 seconds, the smart communication stick will restore factory settings.
	Quick double-click to enable Bluetooth signal (only lasts for 5 minutes).

- **4G Kit-CN-G20 & 4G Kit-CN-G21**

Indicator	Status	Description
		Steady on: The smart communication stick is powered on.

Indicator	Status	Description
		Off: The smart communication stick is not powered on.
		Steady on: The smart communication stick is connected to the server, communication is normal.
		Double flash: The smart communication stick is not connected to the communication base station.
		Quadruple flash: The smart communication stick is connected to the communication base station but not connected to the server.
		Sextuple flash: Communication between the smart communication stick and the inverter is disconnected.
		Off: The smart communication stick is undergoing a software reset or is not powered on.

Button	Description
RELOAD	Hold for 0.5~3 seconds, the Smart Communication Bar will restart.
	Hold for 6~20 seconds, the Smart Communication Bar will restore factory settings.

- **LS4G Kit-CN, 4G Kit-CN**

indicator	Color	Status	Description
Power Light	Green	On	Module is secured and powered on
		Off	Module is not secured or not powered on
Communication Light	Blue	slow blinking (0.2s on, 1.8s off)	• Inverter communication light 2 blinks: Dialing, searching for network • Inverter communication light 4 blinks: Connection to cloud failed due to no data flow

		slow blinking (1.8s on, 0.2s off)	• Inverter communication light 2 blinks: Dialing successful • Inverter communication light steady on: Cloud connection successful • Inverter communication light 4 blinks: Connection to cloud failed due to no data flow
		fast blinking (0.125s on, 0.125s off)	Inverter is communicating with the cloud via the module
		0.2s on, 8s off	SIM card not installed or poor SIM card contact

- **Ezlink3000**

indicator/Silkscreen	Color	Status	Description
Power light	Blue		Flashing: The communication stick is operating normally.
			Off: The communication stick is powered off.
Communication light	Green		Steady on: The communication stick is connected to the server.
			Double flash: The communication stick is not connected to the router.
			Quadruple flash: The communication stick is connected to the router but not to the server.
RELOAD	-	-	Short press for 1-3 seconds to restart the communication stick. Long press for 6-10 seconds to restore factory settings. Quick double-click to enable Bluetooth signal (only lasts for 5 minutes).

6.4 Close Cabinet Door

- **Lynx C Series 60kWh Commercial & Industrial Battery System**

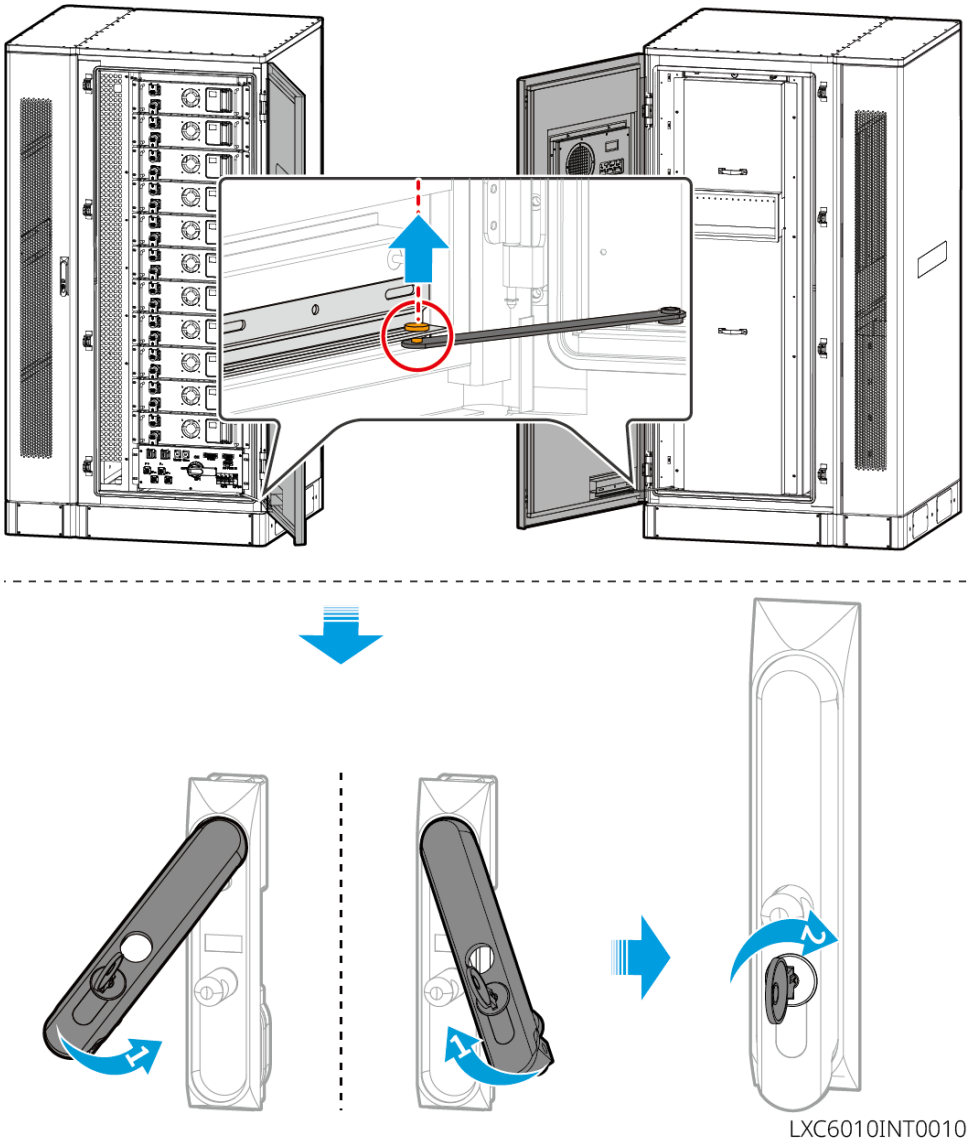

- **BAT-CSeries 61.4-112.6kWh Commercial & Industrial Battery System**

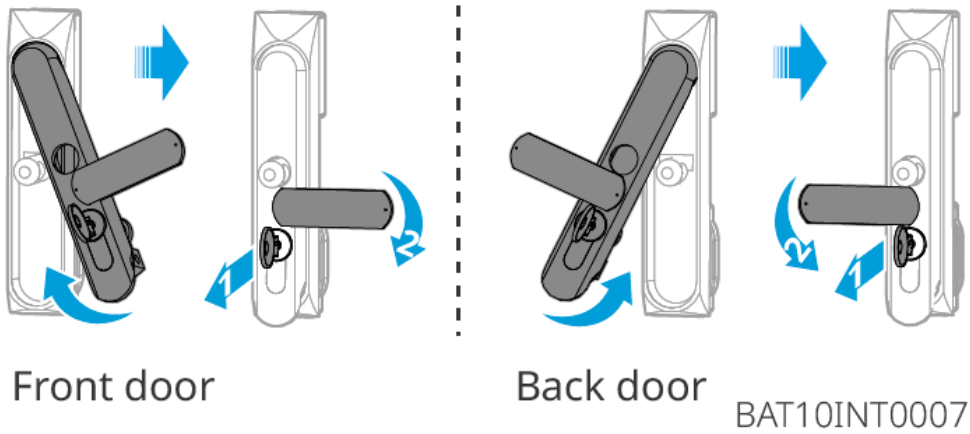
1
2
1
2
Front door
Back door
BAT10INT0007

7 System Debugging and Power Station Monitoring

7.1 Device debugging and power plant monitoring via SEMS+ App

SEMS+ App is a software for remote power plant monitoring or local device debugging. It supports installers or owners:

- Remotely monitor the operation of the power plant and set the operation parameters of the power plant and devices.
- Locally connect to devices, view device operation status, and set device parameters.

Download and Install SEMS+ App

Mobile phone requirements:

- Mobile operating system requirements: Android 7.0 and above, iOS 15.1 and above.
- Mobile phone supports a web browser and connects to the Internet.
- Mobile phone supports WLAN/Bluetooth functionality.

Download methods:

Method 1:

Search for SEMS+ in Google Play, App Store, Huawei, Honor, Xiaomi, OPPO, vivo app stores to download and install.

SEMS0163

Method 2:

Scan the QR code below to download and install.

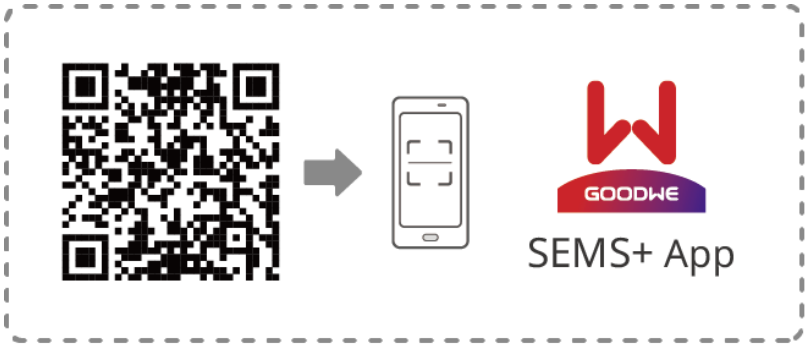

SEMS0164

For detailed functions, please refer to the SEMS+ App User Manual. The user manual can be obtained from the official website or by scanning the QR code below.

7.2 Device Debugging and Power Plant Monitoring via SEMS+ WEB

SEMS+ WEB is a monitoring platform that communicates via WiFi or LAN. The following are common functions of SEMS+ WEB:

1. Manage organization or user information, etc.
2. Add and monitor power plant information, etc.
3. Maintain devices.

For detailed functions, please refer to the SEMS+ WEB User Manual.

SEMS+ WEB User Manual

8 Maintenance

8.1 Power OFF the System

⚠DANGER

- When performing operation or maintenance on equipment within the system, please power down the system. Operating equipment while energized may cause equipment damage or risk of electric shock.
- After the equipment is powered off, internal components require a certain amount of time to discharge. Please wait according to the label's time requirement until the equipment is completely discharged.
- Restarting the battery should be performed using the air switch power-on method.
- When shutting down the battery system, strictly adhere to the battery system power-down requirements to prevent damage to the battery system.
- When there are multiple batteries in the system, powering down any one battery will power down all batteries.

NOTICE

- The circuit breakers between the inverter and the battery, and between battery systems, must be installed in accordance with local laws and regulations.
- To ensure effective protection of the battery system, keep the cover plate of the battery system switch in a closed state. The protective cover should automatically close after being opened. If the battery system switch will not be used for an extended period, secure it with screws.

Power-Off Procedure

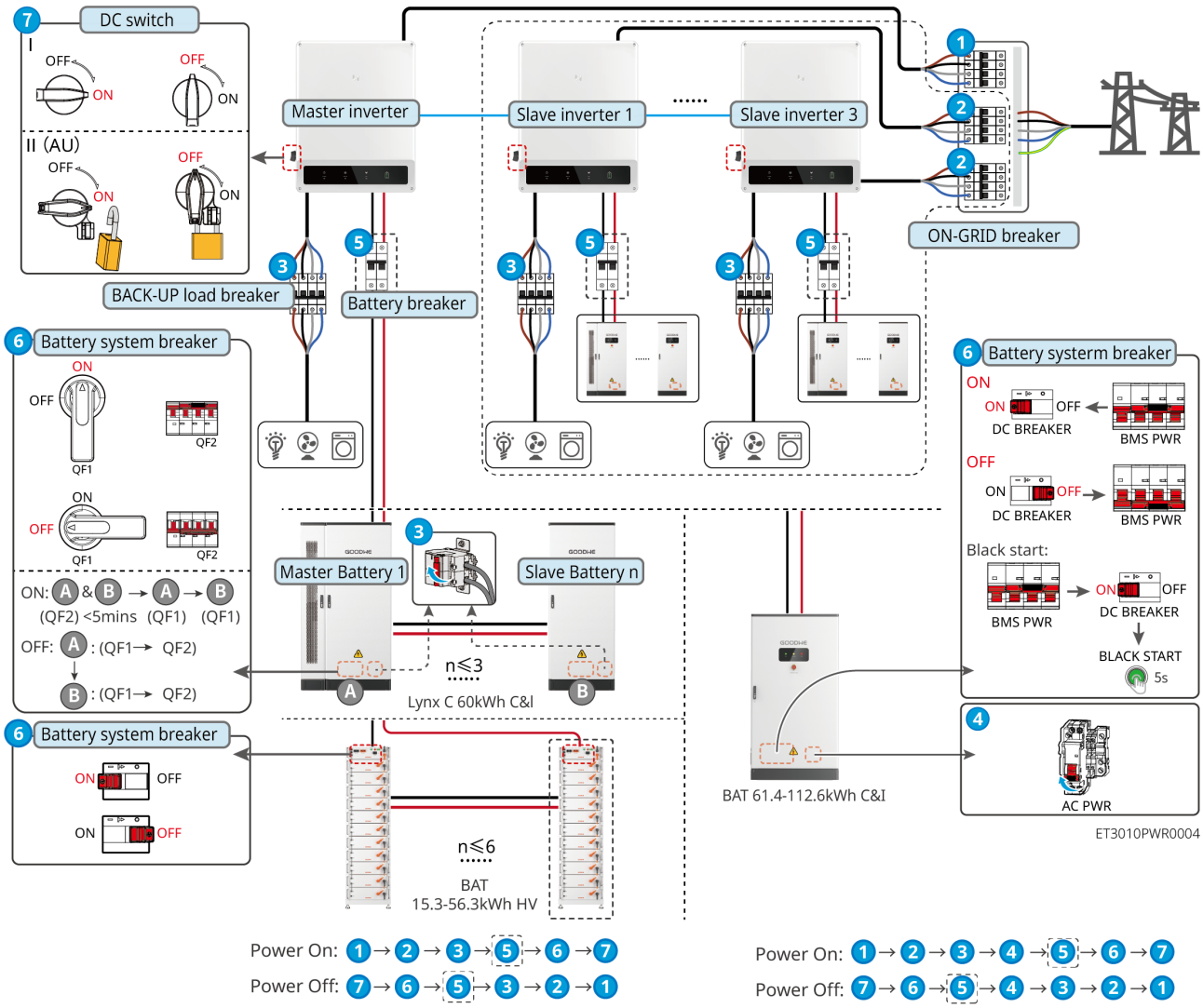

❺: Optional based on local laws and regulations.

8.2 Removing the Equipment

⚠ DANGER

- Ensure the device is powered off.
- Wear personal protective equipment when operating the device.
- Use proper disassembly tools when removing wiring terminals to avoid damaging the terminals or the device.
- Unless otherwise specified, the device disassembly sequence is the reverse of the installation sequence, which will not be reiterated in this document.

1. Power down the system.
2. Use labels to mark the cable types for the cables connected in the system.
3. Disconnect the connection cables of the Inverter, Battery, and smart meter in the system, such as: DC cable, AC cable, Communication cable, PE cable.
4. Remove devices such as the smart communication stick, Inverter, Battery, smart meter, etc.
5. Store the equipment properly. If it needs to be put into use later, ensure that the storage conditions meet the requirements.

8.3 Disposing of the Equipment

When the equipment can no longer be used and needs to be disposed of, please dispose of it according to the electrical waste disposal requirements of the regulations in the country/region where the equipment is located. The equipment must not be disposed of as general household waste.

8.4 Routine Maintenance

⚠WARNING
• If any issues that may affect the battery or energy storage inverter system are found, contact after-sales personnel. Disassembly by unauthorized personnel is prohibited. • If exposed internal copper wires are found in the conductive cables, do not touch them. High voltage danger. Contact after-sales personnel. Disassembly by unauthorized personnel is prohibited. • In case of other emergencies, contact after-sales personnel immediately. Operate only under the guidance of after-sales personnel, or wait for on-site operation by after-sales personnel.

Maintenance Item	Maintenance Method	Maintenance Cycle	Maintenance Purpose
System Cleaning	Check for foreign objects or dust on the heat sink, fan, and air inlet/outlet. Check if the installation space meets requirements, and if there is any debris accumulation around the equipment.	Once every 6 months	Prevent cooling failures.
System Installation	Check if the equipment installation is secure and if fastening screws are loose. Check for any damage or deformation on the equipment exterior.	Once every 6 months to once a year	Confirm equipment installation stability.
Electrical Connections	Check for loose electrical connections, damaged cable sheaths, or exposed copper wires.	Once every 6 months to once a year	Confirm reliability of electrical connections.
Sealing	Check if the sealing of the equipment's cable entry holes meets requirements. Re-seal if gaps are too large or unblocked.	Once a year	Confirm machine sealing and intact waterproof performance.
Battery Maintenance	If the battery has been unused or not fully charged for an extended period, regular charging is recommended.	Once every 15 days	Protect battery service life.

8.5 fault

NOTICE
The fault content in the manual is updated irregularly, and there may be slight variations across different models. Please refer to the real-time display on your device for specific details.

8.5.1 Viewing Fault/Alarms Information

All detailed information on faults and alarms in the energy storage system is displayed in the [SEMS+ App] and [SEMS+ WEB]. If your product experiences an abnormality and you do not see related fault information in [SEMS+ App] or [SEMS+ WEB], please contact the after-sales service center.

- SEMS+ App

1. Open the SEMS+ App and log in using any account.
2. Go to [power station] > [Alarms] to view all power station fault information.
3. Click on a specific fault name to view details such as the time of occurrence, possible causes, and solutions.

- SEMS+ WEB

1. Open SEMS+ WEB and log in using any account.
2. On the power station details interface, click [Alarms] to view all alarm information for the current power station.

8.5.2 Fault Information and Troubleshooting

Please perform troubleshooting according to the following methods. If the troubleshooting methods cannot help you, please contact the after-sales service center.
When contacting the after-sales service center, please collect the following information to facilitate a quick resolution.

1. Product information, such as: serial number, software version, device installation time, fault occurrence time, fault occurrence frequency, etc.
2. Device installation environment, such as: weather conditions, whether components are obstructed or shaded, etc. It is recommended to provide photos, videos, and other files of the installation environment to assist in problem analysis.
3. Grid conditions.

8.5.2.1 System Malfunction

If the system experiences an unlisted issue, or if following the instructions does not prevent the problem or abnormality, immediately stop operating the system and

contact your dealer at once.

No.	fault	Solution
1	Unable to search for the Smart Comm Stick wireless signal	1. Ensure no other devices are connected to the Smart Comm Stick's wireless signal. 2. Ensure the App is upgraded to the latest version. 3. Ensure the Smart Comm Stick is powered normally, with the blue signal light blinking or steadily on. 4. Ensure the smart device is within the communication range of the Smart Comm Stick. 5. Refresh the device list in the App. 6. Restart the inverter.
2	Unable to connect to the Smart Comm Stick wireless signal	1. Ensure no other devices are connected to the Smart Comm Stick's wireless signal. 2. Restart the inverter or the Comm Stick, then try connecting to the Smart Comm Stick wireless signal again. 3. Ensure Bluetooth encryption pairing is successful.
3	Unable to find the router SSID	1. Place the router closer to the Smart Comm Stick, or add a WiFi repeater to enhance the WiFi signal. 2. Reduce the number of devices connected to the router.
4	After all configuration is complete, the Smart Comm Stick fails to connect to the router	1. Restart the inverter. 2. Check if the network name, encryption method, and password in the WiFi configuration match those of the router. 3. Restart the router. 4. Place the router closer to the Smart Comm Stick, or add a WiFi repeater to enhance the WiFi signal.

No.	fault	Solution
5	After all configuration is complete, the Smart Comm Stick fails to connect to the server	Restart the router and the inverter.

8.5.2.2 Inverter Fault

8.5.2.2.1 Troubleshooting (Fault Codes F01-F40)

Fault Code	Fault Name	Possible Cause	Troubleshooting Suggestions
F01	Grid Power Outage	1. Grid power outage. 2. AC line or AC switch is disconnected.	1. The alarm will disappear automatically after grid power supply is restored. 2. Check if the AC line or AC switch is disconnected.

Fault Code	Fault Name	Possible Cause	Troubleshooting Suggestions
F02	Grid Overvoltage Protection	Grid voltage is higher than the allowable range, or the duration of high voltage exceeds the HVRT set value.	1. If it occurs occasionally, it may be a short-term grid anomaly. The inverter will resume normal operation after detecting a normal grid, requiring no manual intervention. 2. If it occurs frequently, check if the grid voltage is within the allowable range. If not, contact the local power operator. If yes, also modify the grid overvoltage protection point after obtaining consent from the local power operator. 3. If normal operation cannot be restored for a long time, check if the AC side circuit breaker and output cables are properly connected.

Fault Code	Fault Name	Possible Cause	Troubleshooting Suggestions
F03	Grid Undervoltage Protection	Grid voltage is lower than the allowable range, or the duration of low voltage exceeds the LVRT set value.	1. If it occurs occasionally, it may be a short-term grid anomaly. The inverter will resume normal operation after detecting a normal grid, requiring no manual intervention. 2. If it occurs frequently, check if the grid voltage is within the allowable range. If not, contact the local power operator. If yes, also modify the grid undervoltage protection point after obtaining consent from the local power operator. 3. If normal operation cannot be restored for a long time, check if the AC side circuit breaker and output cables are properly connected.

Fault Code	Fault Name	Possible Cause	Troubleshooting Suggestions
F04	Grid Rapid Overvoltage Protection	Abnormal grid voltage detection or extremely high voltage triggers the fault.	1. If it occurs occasionally, it may be a short-term grid anomaly. The inverter will resume normal operation after detecting a normal grid, requiring no manual intervention. 2. If it occurs frequently, check if the grid voltage is within the allowable range. If not, contact the local power operator. If yes, also modify the grid undervoltage protection point after obtaining consent from the local power operator. 3. If normal operation cannot be restored for a long time, check if the AC side circuit breaker and output cables are properly connected.
F05	10min Overvoltage Protection	The moving average of grid voltage within 10min exceeds the range specified by safety regulations.	Check if the grid voltage has been operating at a high level for a long time. If it occurs frequently, check if the grid frequency is within the allowable range. If not, contact the local power operator. If yes, also modify the grid 10min overvoltage protection point after obtaining consent from the local power operator.

Fault Code	Fault Name	Possible Cause	Troubleshooting Suggestions
F06	Grid Overfrequency	Grid anomaly: The actual grid frequency is higher than the local grid standard requirements.	1. If it occurs occasionally, it may be a short-term grid anomaly. The inverter will resume normal operation after detecting a normal grid, requiring no manual intervention. 2. If it occurs frequently, check if the grid frequency is within the allowable range. If not, contact the local power operator. If yes, also modify the grid overfrequency protection point after obtaining consent from the local power operator.
F07	Grid Underfrequency	Grid anomaly: The actual grid frequency is lower than the local grid standard requirements.	1. If it occurs occasionally, it may be a short-term grid anomaly. The inverter will resume normal operation after detecting a normal grid, requiring no manual intervention. 2. If it occurs frequently, check if the grid frequency is within the allowable range. If not, contact the local power operator. If yes, also modify the grid overfrequency protection point after obtaining consent from the local power operator.

Fault Code	Fault Name	Possible Cause	Troubleshooting Suggestions
F08	Grid Frequency Instability	Grid anomaly: The rate of change of the actual grid frequency does not comply with the local grid standard.	1. If it occurs occasionally, it may be a short-term grid anomaly. The inverter will resume normal operation after detecting a normal grid, requiring no manual intervention. 2. If it occurs frequently, check if the grid frequency is within the allowable range. If not, contact the local power operator.
F09	Anti-islanding Protection	The grid has been disconnected, but grid voltage is maintained due to the presence of loads. Grid connection is stopped according to safety protection requirements.	1. If it occurs occasionally, it may be a short-term grid anomaly. The inverter will resume normal operation after detecting a normal grid, requiring no manual intervention. 2. If it occurs frequently, check if the grid frequency is within the allowable range. If not, contact the local power operator.
F10	LVRT Undervoltage	Grid anomaly: The duration of abnormal grid voltage exceeds the time specified for high/low voltage ride-through.	1. If it occurs occasionally, it may be a short-term grid anomaly. The inverter will resume normal operation after detecting a normal grid, requiring no manual intervention. 2. If it occurs frequently, check if the grid voltage and frequency are within the allowable range and stable. If not, contact the local power operator.

Fault Code	Fault Name	Possible Cause	Troubleshooting Suggestions
F11	HVRT Overvoltage	Grid anomaly: The duration of abnormal grid voltage exceeds the time specified for high/low voltage ride-through.	1. If it occurs occasionally, it may be a short-term grid anomaly. The inverter will resume normal operation after detecting a normal grid, requiring no manual intervention. 2. If it occurs frequently, check if the grid voltage and frequency are within the allowable range and stable. If not, contact the local power operator.
F12	30mA GFCI Protection	The insulation resistance to ground of the input decreases during inverter operation.	1. If it occurs occasionally, it may be caused by occasional external line anomalies. It will resume normal operation after the fault is cleared, requiring no manual intervention. 2. If it occurs frequently or cannot be restored for a long time, check if the PV string's impedance to ground is too low.
F13	60mA GFCI Protection	The insulation resistance to ground of the input decreases during inverter operation.	1. If it occurs occasionally, it may be caused by occasional external line anomalies. It will resume normal operation after the fault is cleared, requiring no manual intervention. 2. If it occurs frequently or cannot be restored for a long time, check if the PV string's impedance to ground is too low.

Fault Code	Fault Name	Possible Cause	Troubleshooting Suggestions
F14	150mA GFCI Protection	The insulation resistance to ground of the input decreases during inverter operation.	1. If it occurs occasionally, it may be caused by occasional external line anomalies. It will resume normal operation after the fault is cleared, requiring no manual intervention. 2. If it occurs frequently or cannot be restored for a long time, check if the PV string's impedance to ground is too low.
F15	GFCI Gradual Change Protection	The insulation resistance to ground of the input decreases during inverter operation.	1. If it occurs occasionally, it may be caused by occasional external line anomalies. It will resume normal operation after the fault is cleared, requiring no manual intervention. 2. If it occurs frequently or cannot be restored for a long time, check if the PV string's impedance to ground is too low.
F16	DCI Level 1 Protection	The DC component of the inverter output current is higher than the safety regulation or the machine's default allowable range.	1. If it is caused by an external fault, the inverter will automatically resume normal operation after the fault disappears, requiring no manual intervention. 2. If this alarm occurs frequently, affecting the normal power generation of the power station, contact the dealer or after-sales service center.

Fault Code	Fault Name	Possible Cause	Troubleshooting Suggestions
F17	DCI Level 2 Protection	The DC component of the inverter output current is higher than the safety regulation or the machine's default allowable range.	1. If it is caused by an external fault, the inverter will automatically resume normal operation after the fault disappears, requiring no manual intervention. 2. If this alarm occurs frequently, affecting the normal power generation of the power station, contact the dealer or after-sales service center.

Fault Code	Fault Name	Possible Cause	Troubleshooting Suggestions
F18	Low Insulation Resistance	1. PV string shorted to protective earth. 2. The PV string is installed in a humid environment for a long time and the line has poor insulation to ground. 3. Low insulation impedance of the battery port line to ground.	1. Check the impedance of the PV string/battery port to protective earth. A value greater than 80kΩ is normal. If the checked value is less than 80kΩ, locate and rectify the short circuit point. 2. Check if the inverter's protective earth wire is correctly connected. 3. If it is confirmed that the impedance is indeed below the default value in rainy/overcast environments, please reset the inverter's "Insulation Impedance Protection Point" via the App. For inverters in the Australia and New Zealand markets, the insulation impedance fault can also be alerted in the following ways: 1. The inverter is equipped with a buzzer. When a fault occurs, the buzzer sounds continuously for 1 minute; if the fault is not resolved, the buzzer sounds again every 30 minutes. 2. If the inverter is added to the monitoring platform and alarm notification methods are set, alarm information can be sent to customers via email.

Fault Code	Fault Name	Possible Cause	Troubleshooting Suggestions
F19	Grounding Abnormal	1. The inverter's protective earth wire is not connected. 2. When the PV string output is grounded, the inverter output side is not connected to an isolation transformer.	1. Please confirm if the inverter's protective earth wire is not properly connected. 2. In scenarios where the PV string output is grounded, please confirm if the inverter output side is connected to an isolation transformer.
F20	Hard Anti-reverse Power Flow Protection	Load abnormal fluctuation	1. If it is caused by an external fault, the inverter will automatically resume normal operation after the fault disappears, requiring no manual intervention. 2. If this alarm occurs frequently, affecting the normal power generation of the power station, contact the dealer or after-sales service center.

Fault Code	Fault Name	Possible Cause	Troubleshooting Suggestions
F21	Internal Comm Loss	Slave DSP1 communication timeout - Master DSP, Slave DSP2 communication timeout - Master DSP, Slave DSP2 communication timeout - Slave DSP1, Master DSP communication timeout - Slave DSP1, Master DSP communication timeout - Slave DSP2 or Slave DSP1 communication timeout - Slave DSP2: 1. Chip not powered on 2. Chip firmware version error	Disconnect the AC output side switch and DC input side switch, wait 5 minutes, then close the AC output side switch and DC input side switch. If the fault persists, contact the dealer or after-sales service center.

Fault Code	Fault Name	Possible Cause	Troubleshooting Suggestions
		Master DSP CAN module error, Slave DSP1 CAN module error or Slave DSP2 CAN module error: 1. Frame format error 2. Parity error 3. CAN bus offline 4. Hardware CRC error 5. Control bit is receive (transmit) when transmitting (receiving) 6. Transmission to a disallowed unit	
F22	Generator Waveform Detection Fault	1. This fault will always be displayed when a generator is not connected; 2. When the generator is operating, failure to meet generator safety regulations will trigger this fault.	1. Ignore this fault when a generator is not connected; 2. When this fault occurs due to a generator fault, it is normal. Wait for a period after the generator recovers, and the fault will clear automatically; 3. This fault will not affect the normal operation of the off-grid mode. 4. When both the generator and grid are connected and meet safety requirements, the grid has priority for grid connection, and the system will operate in grid-connected state.
F23	Generator Abnormal Connection		
F24	Generator Voltage Low		
F25	Generator Voltage High		
F26	Generator Frequency Low		

Fault Code	Fault Name	Possible Cause	Troubleshooting Suggestions
F27	Generator Frequency High		
F28	Parallel I/O Self-check Abnormal	Parallel communication cable not securely connected or parallel IO chip damaged	Check if the parallel communication cable is securely connected, then check if the IO chip is damaged. If yes, replace the IO chip.
F29	Paralell Grid Line Reversed	Some machines have grid lines reversed with others	Reconnect the grid lines.
F30	AC HCT check Abnormal	AC sensor has sampling abnormality	Disconnect the AC output side switch and DC input side switch, wait 5 minutes, then close the AC output side switch and DC input side switch. If the fault persists, contact the dealer or after-sales service center.
F31	GFCI HCT Check Abnormal	Leakage current sensor has sampling abnormality	Disconnect the AC output side switch and DC input side switch, wait 5 minutes, then close the AC output side switch and DC input side switch. If the fault persists, contact the dealer or after-sales service center.
F32	Inverter Internal Failure	Inverter has a fault	Disconnect the AC output side switch and DC input side switch, wait 5 minutes, then close the AC output side switch and DC input side switch. If the fault persists, contact the dealer or after-sales service center.
F33	Flash Read/Write Error	Possible causes: Flash content changed; Flash lifespan exhausted;	1. Upgrade to the latest firmware. 2. Contact the dealer or after-sales service center.

Fault Code	Fault Name	Possible Cause	Troubleshooting Suggestions
F34	AFCI Check Failure	The arc fault module did not detect an arc fault during the arc self-check process.	Disconnect the AC output side switch and DC input side switch, wait 5 minutes, then close the AC output side switch and DC input side switch. If the fault persists, contact the dealer or after-sales service center.
F35	Cabinet Overtemperature	Cabinet temperature is too high, possible causes: 1. Poor ventilation at the inverter installation location. 2. Ambient temperature is too high. 3. Internal fan operation is abnormal.	1. Check if the ventilation at the inverter installation location is good and if the ambient temperature exceeds the maximum allowable ambient temperature range. 2. If ventilation is poor or ambient temperature is too high, improve its ventilation and heat dissipation conditions. 3. If both ventilation and ambient temperature are normal, contact the dealer or after-sales service center.

Fault Code	Fault Name	Possible Cause	Troubleshooting Suggestions
F36	Bus Overvoltage	BUS overvoltage, possible causes: 1. PV voltage is too high; 2. Inverter BUS voltage sampling abnormality; 3. Poor isolation effect of the dual-split transformer at the inverter output side, causing mutual interference when two inverters are connected in parallel, with one inverter reporting DC overvoltage during grid connection;	Disconnect the AC output side switch and DC input side switch, wait 5 minutes, then close the AC output side switch and DC input side switch. If the fault persists, contact the dealer or after-sales service center.

Fault Code	Fault Name	Possible Cause	Troubleshooting Suggestions
F37	PV Input Overvoltage	PV input voltage is too high, possible cause: PV array configuration error, too many PV panels connected in series in a string, causing the string's open-circuit voltage to be higher than the inverter's maximum operating voltage.	Check the series configuration of the corresponding PV array string to ensure the string's open-circuit voltage is not higher than the inverter's maximum operating voltage. After the PV array is correctly configured, the inverter alarm will disappear automatically.
F38	PV Continuous Hardware Overcurrent	1. Unreasonable component configuration. 2. Hardware damage.	Disconnect the AC output side switch and DC input side switch, wait 5 minutes, then close the AC output side switch and DC input side switch. If the fault persists, contact the dealer or after-sales service center.
F39	PV Continuous Software Overcurrent	1. Unreasonable component configuration. 2. Hardware damage.	Disconnect the AC output side switch and DC input side switch, wait 5 minutes, then close the AC output side switch and DC input side switch. If the fault persists, contact the dealer or after-sales service center.

Fault Code	Fault Name	Possible Cause	Troubleshooting Suggestions
F40, F98	String Reverse Connection (String 1-n) n: Determined based on the actual number of inverter strings.	PV string reverse connection	Check if the string is reverse connected.

8.5.2.2.2 Troubleshooting (Fault Codes F41-F80)

Fault Code	Fault Name	Fault Cause	Troubleshooting Suggestions
F41	Generator Port Overload	1. Off-grid side output exceeds specifications. 2. Off-grid side short circuit. 3. Off-grid terminal voltage is too low. 4. When used as a heavy load port, the heavy load exceeds specifications.	Confirm the off-grid side output voltage, current, power and other data to identify the cause of the problem.

Fault Code	Fault Name	Fault Cause	Troubleshooting Suggestions
F42	DC Arcing Failure(String1-n) n: Determined based on the actual number of inverter strings.	1. DC side connection terminals are loose. 2. DC side connection terminals have poor contact. 3. DC cable core is damaged or has poor contact.	1. After the machine reconnects to the grid, check if the voltage and current of each circuit show abnormal reduction or drop to zero. 2. Check if the DC side terminals are firmly connected.
F43	Grid Waveform Abnormal	Utility grid abnormality: Anomaly in grid voltage detection triggers the fault.	1. If it occurs occasionally, it may be due to a short-term grid anomaly. The inverter will resume normal operation after detecting a normal grid, requiring no manual intervention. 2. If it occurs frequently, please check if the grid voltage and frequency are within the allowable range and stable. If not, contact the local power operator.
F44	Grid Phase Loss	Utility grid abnormality: Single-phase voltage drop in the grid.	1. If it occurs occasionally, it may be due to a short-term grid anomaly. The inverter will resume normal operation after detecting a normal grid, requiring no manual intervention. 2. If it occurs frequently, please check if the grid voltage and frequency are within the allowable range and stable. If not, contact the local power operator.

Fault Code	Fault Name	Fault Cause	Troubleshooting Suggestions
F45	Grid Voltage Imbalance	Excessive difference in grid phase voltages.	1. If it occurs occasionally, it may be due to a short-term grid anomaly. The inverter will resume normal operation after detecting a normal grid, requiring no manual intervention. 2. If it occurs frequently, please check if the grid voltage and frequency are within the allowable range and stable. If not, contact the local power operator.
F46	Grid Phase Sequence Failure	Inverter and grid wiring abnormality: Wiring is not in positive sequence.	1. Check if the inverter and grid wiring are in positive sequence. The fault will disappear automatically after correct wiring (e.g., swapping any two live wires). 2. If the wiring is correct but the fault persists, contact the dealer or after-sales service center.
F47	Grid Rapid Shutdown Protection	Rapidly shuts down output after detecting a grid power outage condition.	The fault disappears automatically after grid power supply is restored.
F48	Grid Neutral Wire Loss (Split Grid)	Neutral wire loss in a split-phase grid.	1. The alarm disappears automatically after grid power supply is restored. 2. Check if the AC line or AC switch is disconnected.
F49	L-PE Short Circuit	Low impedance or short circuit between output phase line and PE.	Measure the impedance between the output phase line and PE, locate the position with low impedance and repair it.

Fault Code	Fault Name	Fault Cause	Troubleshooting Suggestions
F50	DCV Level 1 Protection	Abnormal load fluctuation.	1. If it is caused by an external fault, the inverter will automatically resume normal operation after the fault disappears, requiring no manual intervention. 2. If this alarm occurs frequently and affects normal power generation of the plant, contact the dealer or after-sales service center.
F51	DCV Level 2 Protection	Abnormal load fluctuation.	
F52	Leakage current (GFCI) Multiple Fault Shutdown	North American safety regulations require manual recovery or waiting 24h after multiple faults; automatic recovery is not allowed.	Please check if the PV string's impedance to ground is too low.
F53	DC Arcing (AFCI) Multiple Fault Shutdown	North American safety regulations require manual recovery or waiting 24h after multiple faults; automatic recovery is not allowed.	1. After the machine reconnects to the grid, check if the voltage and current of each circuit show abnormal reduction or drop to zero. 2. Check if the DC side terminals are firmly connected.

Fault Code	Fault Name	Fault Cause	Troubleshooting Suggestions
F54	External Communication Link Break	Communication loss with external devices of the inverter, possibly due to peripheral power issues, communication protocol mismatch, or lack of configuration for the corresponding peripheral.	Judgment is based on the actual model and detection enable bits. Peripherals not supported by some models will not be detected.
F55	Back-up Port Overload Fault	Prevents the inverter from continuously outputting overload.	Turn off some off-grid loads to reduce the inverter's off-grid output power.
F56	Back-up Port Overvoltage Fault	Prevents damage to loads caused by inverter output overvoltage.	1. If it occurs occasionally, it may be caused by load switching and requires no manual intervention. 2. If it occurs frequently, contact the dealer or after-sales service center.
F57	External Box Fault	Waiting time for the Box to switch relays is too long during grid-to-off-grid transition.	1. Check if the Box is working normally. 2. Check if the Box communication wiring is correct.
F58	CT Loss Fault	CT connection wire disconnected (Japanese safety regulation requirement).	Check if the CT wiring is correct.

Fault Code	Fault Name	Fault Cause	Troubleshooting Suggestions
F59	Parallel CAN Communication Abnormal	Parallel communication cable is not securely connected or some machines are offline.	Check if all machines are powered on and if the parallel communication cable is securely connected.
F60	Parallel Back-up Connection Reversed	Backup lines of some machines are reversed with others.	Reconnect the backup lines.
F61	Inverter Soft Start Failure	Inverter soft start failure during off-grid cold start.	Check if the inverter module is damaged.
F62	AC HCT Failure	HCT sensor abnormality.	Turn off the AC output side switch and DC input side switch, wait 5 minutes, then turn them on. If the fault persists, contact the dealer or after-sales service center.
F63	GFCI HCT Failure	Leakage current sensor abnormality.	Turn off the AC output side switch and DC input side switch, wait 5 minutes, then turn them on. If the fault persists, contact the dealer or after-sales service center.
F64	Inverter Internal Failure	Inverter has a fault.	Turn off the AC output side switch and DC input side switch, wait 5 minutes, then turn them on. If the fault persists, contact the dealer or after-sales service center.

Fault Code	Fault Name	Fault Cause	Troubleshooting Suggestions
F65	AC Terminal Overtemperature	AC terminal temperature is too high, possible causes: 1. Inverter installation location lacks ventilation. 2. Ambient temperature is too high. 3. Internal fan operation is abnormal.	1. Check if the ventilation at the inverter installation location is adequate and if the ambient temperature exceeds the maximum allowable range. 2. If ventilation is poor or ambient temperature is too high, improve the ventilation and heat dissipation conditions. 3. If both ventilation and ambient temperature are normal, contact the dealer or after-sales service center.
F66	INV Module Overtemperature	Inverter module temperature is too high, possible causes: 1. Inverter installation location lacks ventilation. 2. Ambient temperature is too high. 3. Internal fan operation is abnormal.	1. Check if the ventilation at the inverter installation location is adequate and if the ambient temperature exceeds the maximum allowable range. 2. If ventilation is poor or ambient temperature is too high, improve the ventilation and heat dissipation conditions. 3. If both ventilation and ambient temperature are normal, contact the dealer or after-sales service center.

Fault Code	Fault Name	Fault Cause	Troubleshooting Suggestions
F67	Boost Module Overtemperature	Boost module temperature is too high, possible causes: 1. Inverter installation location lacks ventilation. 2. Ambient temperature is too high. 3. Internal fan operation is abnormal.	1. Check if the ventilation at the inverter installation location is adequate and if the ambient temperature exceeds the maximum allowable range. 2. If ventilation is poor or ambient temperature is too high, improve the ventilation and heat dissipation conditions. 3. If both ventilation and ambient temperature are normal, contact the dealer or after-sales service center.
F68	AC Capacitor Overtemperature	Output filter capacitor temperature is too high, possible causes: 1. Inverter installation location lacks ventilation. 2. Ambient temperature is too high. 3. Internal fan operation is abnormal.	1. Check if the ventilation at the inverter installation location is adequate and if the ambient temperature exceeds the maximum allowable range. 2. If ventilation is poor or ambient temperature is too high, improve the ventilation and heat dissipation conditions. 3. If both ventilation and ambient temperature are normal, contact the dealer or after-sales service center.
F69	PV IGBT Short Circuit Fault	Possible causes: 1. IGBT short circuit. 2. Inverter sampling circuit abnormality.	Turn off the AC output side switch and DC input side switch, wait 5 minutes, then turn them on. If the fault persists, contact the dealer or after-sales service center.

Fault Code	Fault Name	Fault Cause	Troubleshooting Suggestions
F70	PV IGBT Open Circuit Fault	1. Software issue causing no PWM generation. 2. Drive circuit abnormality. 3. IGBT open circuit.	
F71	NTC Abnormal	NTC temperature sensor abnormality.	Turn off the AC output side switch and DC input side switch, wait 5 minutes, then turn them on. If the fault persists, contact the dealer or after-sales service center.
F72	PWM Abnormal	Abnormal PWM waveform.	Turn off the AC output side switch and DC input side switch, wait 5 minutes, then turn them on. If the fault persists, contact the dealer or after-sales service center.
F73	CPU Interrupt Abnormal	CPU interrupt abnormality.	Turn off the AC output side switch and DC input side switch, wait 5 minutes, then turn them on. If the fault persists, contact the dealer or after-sales service center.
F74	Microelectronics Fault	Functional safety detection detected an abnormality.	Turn off the AC output side switch and DC input side switch, wait 5 minutes, then turn them on. If the fault persists, contact the dealer or after-sales service center.
F75	PV HCT Fault	Boost current sensor abnormality.	Turn off the AC output side switch and DC input side switch, wait 5 minutes, then turn them on. If the fault persists, contact the dealer or after-sales service center.
F76	1.5V Reference Abnormal	Reference circuit fault.	Turn off the AC output side switch and DC input side switch, wait 5 minutes, then turn them on. If the fault persists, contact the dealer or after-sales service center.

Fault Code	Fault Name	Fault Cause	Troubleshooting Suggestions
F77	0.3V Reference Abnormal	Reference circuit fault.	
F78	CPLD Version Identification Error	CPLD version identification error.	Turn off the AC output side switch and DC input side switch, wait 5 minutes, then turn them on. If the fault persists, contact the dealer or after-sales service center.
F79	CPLD Communication Fault	Communication content error or timeout between CPLD and DSP.	Turn off the AC output side switch and DC input side switch, wait 5 minutes, then turn them on. If the fault persists, contact the dealer or after-sales service center.
F80	Model Identification Fault	Fault related to model identification error.	Turn off the AC output side switch and DC input side switch, wait 5 minutes, then turn them on. If the fault persists, contact the dealer or after-sales service center.

8.5.2.2.3 Troubleshooting (Fault Codes F81-F121)

Fault Code	Fault Name	Possible Cause	Recommended Action
F81	P-Bus Overvoltage		Disconnect the AC output side switch and DC input side switch, wait for 5 minutes, then close the AC output side switch and DC input side switch. If the fault persists, please contact the dealer or after-sales service center.

Fault Code	Fault Name	Possible Cause	Recommended Action
F82	N-Bus Overvoltage	BUS overvoltage, possible causes: 1. PV voltage too high; 2. Inverter BUS voltage sampling abnormal; 3. Poor isolation effect of the split-phase transformer behind the inverter, causing mutual interference when two inverters are grid-connected, with one inverter reporting DC overvoltage during grid connection;	
F83	Bus Overvoltage (Sub CPU1)		Disconnect the AC output side switch and DC input side switch, wait for 5 minutes, then close the AC output side switch and DC input side switch. If the fault persists, please contact the dealer or after-sales service center.
F84	P-Bus Overvoltage (Sub CPU1)		

Fault Code	Fault Name	Possible Cause	Recommended Action
F85	N-Bus Overvoltage (Sub CPU1)	BUS overvoltage, possible causes: 1. PV voltage too high; 2. Inverter BUS voltage sampling abnormal; 3. Poor isolation effect of the split-phase transformer behind the inverter, causing mutual interference when two inverters are grid-connected, with one inverter reporting DC overvoltage during grid connection;	
F86	Bus Overvoltage (Sub CPU2)		Disconnect the AC output side switch and DC input side switch, wait for 5 minutes, then close the AC output side switch and DC input side switch. If the fault persists, please contact the dealer or after-sales service center.
F87	P-Bus Overvoltage (Sub CPU2)		

Fault Code	Fault Name	Possible Cause	Recommended Action
F88	N-Bus Overvoltage (Sub CPU2)	BUS overvoltage, possible causes: 1. PV voltage too high; 2. Inverter BUS voltage sampling abnormal; 3. Poor isolation effect of the split-phase transformer behind the inverter, causing mutual interference when two inverters are grid-connected, with one inverter reporting DC overvoltage during grid connection;	
F89	P-Bus Overvoltage (CPLD)		Disconnect the AC output side switch and DC input side switch, wait for 5 minutes, then close the AC output side switch and DC input side switch. If the fault persists, please contact the dealer or after-sales service center.

Fault Code	Fault Name	Possible Cause	Recommended Action
F90	N-Bus Overvoltage (CPLD)	BUS overvoltage, possible causes: 1. PV voltage too high; 2. Inverter BUS voltage sampling abnormal; 3. Poor isolation effect of the split-phase transformer behind the inverter, causing mutual interference when two inverters are grid-connected, with one inverter reporting DC overvoltage during grid connection;	
F91	FlyCap Software Overvoltage	FlyCap overvoltage, possible causes: 1. PV voltage too high; 2. Inverter FlyCap voltage sampling abnormal;	Disconnect the AC output side switch and DC input side switch, wait for 5 minutes, then close the AC output side switch and DC input side switch. If the fault persists, please contact the dealer or after-sales service center.
F92	FlyCap Hardware Overvoltage		

Fault Code	Fault Name	Possible Cause	Recommended Action
F93	FlyCap Undervoltage	FlyCap undervoltage, possible causes: 1. PV energy insufficient; 2. Inverter FlyCap voltage sampling abnormal;	Disconnect the AC output side switch and DC input side switch, wait for 5 minutes, then close the AC output side switch and DC input side switch. If the fault persists, please contact the dealer or after-sales service center.
F94	FlyCap Precharge Failure	FlyCap precharge failure, possible causes: 1. PV energy insufficient; 2. Inverter FlyCap voltage sampling abnormal;	Disconnect the AC output side switch and DC input side switch, wait for 5 minutes, then close the AC output side switch and DC input side switch. If the fault persists, please contact the dealer or after-sales service center.
F95	FlyCap Precharge Abnormal	1. Control loop parameters unreasonable 2. Hardware damage	Disconnect the AC output side switch and DC input side switch, wait for 5 minutes, then close the AC output side switch and DC input side switch. If the fault persists, please contact the dealer or after-sales service center.
F96, F97	String Overcurrent(String 1-n) n: Determined by the actual number of inverter strings	Possible causes: 1. String overcurrent; 2. String current sensor abnormal	Disconnect the AC output side switch and DC input side switch, wait for 5 minutes, then close the AC output side switch and DC input side switch. If the fault persists, please contact the dealer or after-sales service center.

Fault Code	Fault Name	Possible Cause	Recommended Action
F99, F100	String Missing(String 1-n) n: Determined by the actual number of inverter strings	String fuse open (if present)	Check if the fuse is open.
F101	Battery 1 Precharge Fault	Battery 1 precharge circuit fault (precharge resistor burnt, etc.)	Check if the precharge circuit is in good condition, and whether the battery voltage matches the bus voltage after only the battery is powered on. If not consistent, please contact the dealer or after-sales service center.
F102	Battery 1 Relay Failure	Battery 1 relay cannot operate normally	After powering on the battery, check if the battery relay is working, and if a closing sound is heard. If not operating, please contact the dealer or after-sales service center.
F103	Battery 1 Connection Overvoltage	Battery 1 connection voltage exceeds the machine's rated range	Confirm if the battery voltage is within the machine's rated range.
F104	Battery 2 Precharge Fault	Battery 2 precharge circuit fault (precharge resistor burnt, etc.)	Check if the precharge circuit is in good condition, and whether the battery voltage matches the bus voltage after only the battery is powered on. If not consistent, please contact the dealer or after-sales service center.

Fault Code	Fault Name	Possible Cause	Recommended Action
F105	Battery 2 Relay Failure	Battery 2 relay cannot operate normally	After powering on the battery, check if the battery relay is working, and if a closing sound is heard. If not operating, please contact the dealer or after-sales service center.
F106	Battery 2 Connection Overvoltage	Battery 2 connection voltage exceeds the machine's rated range	Confirm if the battery voltage is within the machine's rated range.
F107	On-grid PWM Sync Failure	Abnormal during carrier synchronization grid connection	1. Check if the sync cable connection is normal 2. Check if the master/slave settings are normal; 3. Disconnect the AC output side switch and DC input side switch, wait for 5 minutes, then close the AC output side switch and DC input side switch. If the fault persists, please contact the dealer or after-sales service center.
F108	DSP Communication Fault	-	-
F109	External STS Fault	Abnormal cable connection between inverter and STS	Check if the wiring sequence of the harness between the inverter and the STS corresponds one by one in order.

Fault Code	Fault Name	Possible Cause	Recommended Action
F110	Export Limit Protection	1. Inverter reports error and disconnects from grid 2. Meter communication unstable 3. Reverse power flow condition occurs	1. Check if the inverter has other error messages. If yes, handle them accordingly; 2. Check if the meter connection is reliable; 3. If this alarm occurs frequently, affecting normal power generation of the plant, please contact the dealer or after-sales service center.
F111	Bypass Overload	-	-
F112	Black Start Failure	-	-
F113	Offgrid AC Ins Volt High	-	-
F114	Relay Failure 2	Relay abnormal, reasons: 1. Relay abnormal (relay short circuit) 2. Relay sampling circuit abnormal. 3. AC side wiring abnormal (possible loose connection or short circuit)	Disconnect the AC output side switch and DC input side switch, wait for 5 minutes, then close the AC output side switch and DC input side switch. If the fault persists, please contact the dealer or after-sales service center.
F115	SVG Precharge Disabled	SVG precharge hardware failure	Contact the dealer or after-sales service center.
F116	Nighttime SVG PID Prevention Fault	PID prevention hardware abnormal	

Fault Code	Fault Name	Possible Cause	Recommended Action
F117	DSP Version Identification Error	DSP software version identification error	Disconnect the AC output side switch and DC input side switch, wait for 5 minutes, then close the AC output side switch and DC input side switch. If the fault persists, please contact the dealer or after-sales service center.
F118	MOS Continuous Overvoltage	1. Software issue causing inverter drive to turn off earlier than flyback drive: 2. Inverter drive circuit abnormal causing failure to turn on: 3. PV voltage too high; 4. Mos voltage sampling abnormal;	Disconnect the AC output side switch and DC input side switch, wait for 5 minutes, then close the AC output side switch and DC input side switch. If the fault persists, please contact the dealer or after-sales service center.
F119	Bus Short Circuit Fault	Hardware damage	If the BUS short circuit fault occurs and the inverter remains offline, please contact the dealer or after-sales service center.
F120	Bus Sampling Abnormal	1. BUS voltage sampling hardware fault	Disconnect the AC output side switch and DC input side switch, wait for 5 minutes, then close the AC output side switch and DC input side switch. If the fault persists, please contact the dealer or after-sales service center.

Fault Code	Fault Name	Possible Cause	Recommended Action
F121	DC Side Sampling Abnormal	1. BUS voltage sampling hardware fault 2. Battery voltage sampling hardware fault 3. Dcrly relay fault	Disconnect the AC output side switch and DC input side switch, wait for 5 minutes, then close the AC output side switch and DC input side switch. If the fault persists, please contact the dealer or after-sales service center.

8.5.2.2.4 Troubleshooting (Fault Codes F122-F163)

Fault Code	Fault Name	Possible Cause	Recommended Action
F122	PV Access Mode Setting Error	There are three PV Access Modes, taking a four-channel MPPT as an example: 1. Parallel Mode: i.e., AAAA mode (same-source mode), PV1-PV4 are from the same source, all 4 PV channels are connected to the same solar panel. 2. Partial Parallel Mode: i.e., AACC mode, PV1 and PV2 are connected from the same source, PV3 and PV4 are connected from the same source. 3. Independent Mode: i.e., ABCD mode (different-source), PV1, PV2, PV3, PV4 are connected independently, each of the 4 PV channels connects to one solar panel. This fault is reported	Check if the PV Access Mode is set correctly (ABCD, AACC, AAAA), and reconfigure the PV Access Mode correctly. 1. Confirm that all actual PV channels are correctly connected. 2. If the PV connections are correct, use the APP or the screen to check if the currently set "PV Access Mode" corresponds to the actual connection mode. 3. If the currently set "PV Access Mode" does not match the actual connection mode, use the APP or the screen to set the "PV Access Mode" to the mode consistent with the actual situation. After setting, disconnect and restart the PV and AC power supply. 4. After configuration, if the current "PV Access Mode" matches the actual connection mode but the fault persists, contact the dealer or the after-sales service center.

Fault Code	Fault Name	Possible Cause	Recommended Action
		if the actual PV connection mode does not match the PV Access Mode configured on the device.	
F123	Multi-channel PV Phase Error	PV Input Mode Setting Error	Check if the PV Access Mode is set correctly (ABCD, AACC, AAAA), and reconfigure the PV Access Mode correctly. 1. Confirm that all actual PV channels are correctly connected. 2. If the PV connections are correct, use the APP or the screen to check if the currently set "PV Access Mode" corresponds to the actual connection mode. 3. If the currently set "PV Access Mode" does not match the actual connection mode, use the APP or the screen to set the "PV Access Mode" to the mode consistent with the actual situation. After setting, disconnect and restart the PV and AC power supply. 4. After configuration, if the current "PV Access Mode" matches the actual connection mode but the fault persists, contact the dealer or the after-sales service center.

Fault Code	Fault Name	Possible Cause	Recommended Action
F124	Battery 1 Reverse Connection fault	Battery 1 positive and negative terminals are reversed	Check if the polarities of the battery and the machine's terminals are consistent.
F125	Battery 2 Reverse Connection fault	Battery 2 positive and negative terminals are reversed	Check if the polarities of the battery and the machine's terminals are consistent.
F126	Abnormal Battery Connection	Abnormal Battery Connection	Check if the battery is working normally.
F127	BAT Overtemperature	High battery temperature, possible causes: 1. Inverter is installed in a poorly ventilated location. 2. Ambient temperature is too high. 3. Internal fan is malfunctioning.	Disconnect the AC output side switch and the DC input side switch. After 5 minutes, close the AC output side switch and the DC input side switch. If the fault persists, contact the dealer or the after-sales service center.
F128	Ref Voltage Abnormal	Reference circuit fault	Disconnect the AC output side switch and the DC input side switch. After 5 minutes, close the AC output side switch and the DC input side switch. If the fault persists, contact the dealer or the after-sales service center.

Fault Code	Fault Name	Possible Cause	Recommended Action
F129	Cabinet Under Temperature	Cabinet temperature is too low, possible cause: ambient temperature is too low.	Disconnect the AC output side switch and the DC input side switch. After 5 minutes, close the AC output side switch and the DC input side switch. If the fault persists, contact the dealer or the after-sales service center.
F130	AC Side SPD fault	AC side surge protection device failure	Replace the AC side surge protection device.
F131	DC Side SPD fault	DC side surge protection device failure	Replace the DC side surge protection device.
F132	Internal Fan Abnormal	Internal fan abnormal, possible causes: 1. Fan power supply abnormal; 2. Mechanical fault (locked rotor); 3. Fan aging or damage.	Disconnect the AC output side switch and the DC input side switch. After 5 minutes, close the AC output side switch and the DC input side switch. If the fault persists, contact the dealer or the after-sales service center.
F133	External Fan Abnormal	External fan abnormal, possible causes: 1. Fan power supply abnormal; 2. Mechanical fault (locked rotor); 3. Fan aging or damage.	

Fault Code	Fault Name	Possible Cause	Recommended Action
F134	PID Diagnosis Abnormal	PID hardware fault or PV voltage too high causing PID suspension	No action required for PID suspension warning caused by high PV voltage. For PID hardware fault, clear the PID fault by turning the PID switch off and then on. Replace the PID device.
F135	Trip-Switch Trip Warning	Possible causes: Overcurrent or PV reverse connection caused the trip-switch to open;	Contact the dealer or the after-sales service center; The reason for tripping is a PV short circuit or reverse connection. Check if there is a historical PV short circuit warning or a historical PV reverse connection warning. If present, a technician needs to inspect the corresponding PV condition. After checking and confirming no fault, manually close the trip-switch and clear this warning via the "Clear Historical Faults" operation in the APP interface.
F136	Historical PV IGBT Short Circuit Warning	Possible causes: Overcurrent caused the trip-switch to open;	Contact the dealer or the after-sales service center; The technician needs to check the Boost hardware and the external string for faults according to the historical PV short circuit warning sub-code. After checking and confirming no fault, clear this warning via the "Clear Historical Faults" operation in the APP interface.

Fault Code	Fault Name	Possible Cause	Recommended Action
F137, F138	Historical PV Reverse Connection Warning (String 1-n) (n: determined by the actual number of inverter strings)	Possible causes: PV reverse connection caused the trip-switch to open;	Contact the dealer or the after-sales service center; The technician needs to check the corresponding string for reverse connection and check for voltage differences in the PV panel configuration according to the historical PV reverse connection warning sub-code. After checking and confirming no fault, clear this warning via the "Clear Historical Faults" operation in the APP interface.
F139	Flash Read/Write Error Warning	Possible causes: 1. Flash content changed; 2. Flash end of life;	1. Upgrade to the latest firmware; 2. Contact the dealer or the after-sales service center.
F140	Meter Comm Loss	This warning may only be reported after anti-backfeed function is enabled. Possible causes: 1. Meter not connected; 2. Communication cable connection between the meter and the inverter is incorrect.	Check the meter wiring, connect the meter correctly. If the fault persists after checking, contact the dealer or the after-sales service center.
F141	PV Panel Type Identification Failure	PV panel identification hardware abnormal	Contact the dealer or the after-sales service center.

Fault Code	Fault Name	Possible Cause	Recommended Action
F142	PV String Mismatch	PV string mismatch, two strings under the same MPPT channel have different open-circuit voltage configurations	Check the open-circuit voltages of the two strings, configure strings with the same open-circuit voltage under the same MPPT channel. Prolonged string mismatch poses a safety risk.
F143	CT Not Connected	CT not connected	Check CT wiring.
F144	CT Reverse Connection	CT reverse connection	Check CT wiring.
F145	PE Loss	Ground wire not connected	Check the ground wire.
F146	High String Terminal Temperature (String 1~8)	Bit 1 of the PV terminal temperature alarm sub-code in register 37176 is set	-
F147	High String Terminal Temperature (String 9~16)	Bit 2 of the PV terminal temperature alarm sub-code in register 37177 is set	-
F148	High String Terminal Temperature (String 17~20)	Bit 3 of the PV terminal temperature alarm sub-code in register 37178 is set	-

Fault Code	Fault Name	Possible Cause	Recommended Action
F149	Historical PV Reverse Connection Warning (String 33~48)	Possible causes: PV reverse connection caused the trip-switch to open;	Contact the dealer or the after-sales service center; The technician needs to check the corresponding string for reverse connection and check for voltage differences in the PV panel configuration according to the historical PV reverse connection warning sub-code. After checking and confirming no fault, clear this warning via the "Clear Historical Faults" operation in the APP interface.
F150	Battery 1 Low Voltage	Battery voltage is below the set value	-
F151	Battery 2 Low Voltage	Battery voltage is below the set value	-
F152	Low Voltage of Battery Power	Battery is not in charging mode, voltage is below the shutdown voltage	-
F153	Battery 1 High Voltage	-	-
F154	Battery 2 High Voltage	-	-

Fault Code	Fault Name	Possible Cause	Recommended Action
F155	Online Low Insulation Resistance	1. PV string shorted to protective earth. 2. PV string installed in a long-term humid environment with poor line-to-ground insulation.	1. Check the impedance of the PV string to protective earth. If a short circuit is found, rectify the short circuit point. 2. Check if the inverter's protective earth wire is correctly connected. 3. If it is confirmed that the impedance is indeed below the default value in rainy/cloudy conditions, reconfigure the "Insulation Resistance Protection Point".
F156	Micro-grid Overload Warning	backup port input current is too high	No action required if it occurs occasionally; If this warning appears frequently, contact the dealer or the after-sales service center.
F157	Manual Reset	-	-
F158	Generator Phase Sequence Abnormal	-	-
F159	Multiplexed Port Configuration Abnormal	The multiplexed (generator) port is configured for micro-grid or large load, but a generator is actually connected	Use the APP to change the multiplexed (generator) port configuration.
F160	EMS Forced Off-grid	EMS issued a forced off-grid command, but the off-grid function is not enabled	Enable the off-grid function.

Fault Code	Fault Name	Possible Cause	Recommended Action
F161	Passive Anti-islanding Protection	-	-
F162	Grid Type Fault	Actual grid type (two-phase or split-phase) does not match the set safety standard	Switch to the corresponding safety standard according to the actual grid type.
F163	Grid Phase Instability	Grid abnormal: The rate of change of grid voltage phase does not comply with local grid standards.	1. If it occurs occasionally, it may be a temporary grid abnormality. The inverter will resume normal operation after detecting a normal grid, no manual intervention is required. 2. If it occurs frequently, check if the grid frequency is within the allowable range. If not, contact the local power operator.

8.5.2.2.5 Fault Phenomenon Handling

Fault Name	Fault Cause	Fault Handling Suggestions
Generator Failure	1. This fault will be displayed continuously when no generator is connected. 2. When the generator is operating, if it does not meet the generator safety regulations, this fault will be triggered.	1. If the generator is not connected, ignore this fault. 2. If this fault appears when the generator has a fault, it is normal. Wait for a period after the generator recovers, and the fault will clear automatically. 3. This fault will not affect the normal operation of the off-grid mode. 4. When both the generator and the grid are connected and meet safety requirements, the grid has priority for grid connection, and the system will operate in grid-tied mode.
BMS Status Bit Error	BMS module failure	Disconnect the AC output side switch and the DC input side switch. After 5 minutes, close the AC output side switch and the DC input side switch. If the fault persists, please contact the dealer or after-sales service center.
Ambient Overtemperature	1. Poor ventilation of the machine 2. Hot air flows back to the ambient temperature sampling point	Disconnect the AC output side switch and the DC input side switch. After 5 minutes, close the AC output side switch and the DC input side switch. If the fault persists, please contact the dealer or after-sales service center.

Fault Name	Fault Cause	Fault Handling Suggestions
PV Terminal Overtemperature	PV terminal overtemperature, possible causes: 1. Poor ventilation at the inverter installation location. 2. Ambient temperature is too high. 3. Internal fan operation is abnormal.	1. Check if the ventilation at the inverter installation location is adequate and if the ambient temperature exceeds the maximum allowable range. 2. If ventilation is poor or the ambient temperature is too high, please improve its ventilation and heat dissipation conditions. 3. If both ventilation and ambient temperature are normal, please contact the dealer or after-sales service center.
BAT Terminal Overtemperature	BAT terminal overtemperature, possible causes: 1. Poor ventilation at the inverter installation location. 2. Ambient temperature is too high.	1. Check if the ventilation at the inverter installation location is adequate and if the ambient temperature exceeds the maximum allowable range. 2. If ventilation is poor or the ambient temperature is too high, please improve its ventilation and heat dissipation conditions. 3. If both ventilation and ambient temperature are normal, please contact the dealer or after-sales service center.
AC Terminal Overtemperature Warning	AC terminal overtemperature, possible causes: 1. Poor ventilation at the inverter installation location. 2. Ambient temperature is too high. 3. Internal fan operation is abnormal.	

Fault Name	Fault Cause	Fault Handling Suggestions
BAT Terminal Overtemperature Warning	BAT terminal overtemperature, possible causes: 1. Poor ventilation at the inverter installation location. 2. Ambient temperature is too high.	1. Check if the ventilation at the inverter installation location is adequate and if the ambient temperature exceeds the maximum allowable range. 2. If ventilation is poor or the ambient temperature is too high, please improve its ventilation and heat dissipation conditions. 3. If both ventilation and ambient temperature are normal, please contact the dealer or after-sales service center.
Three-phase on-grid fault	Three-phase external wiring error	Re-wire the connections.
External STS Failure	Abnormal cable connection between the inverter and the STS	Check if the wiring sequence of the harness between the inverter and the STS corresponds one-to-one in order.

Fault Name	Possible Cause	Recommended Action
Parallel Comm Timeout Shutdown	In a parallel system, if a slave unit has not communicated with the master for more than 400 seconds.	Check if the parallel communication cable harness is securely connected. Check if the slave unit addresses are duplicated.
Three-phase off-grid phase loss fault	Phase loss in a three-phase system.	1. Check if all inverters are powered on. 2. Check if each phase of the three-phase system is connected to an inverter.

Fault Name	Possible Cause	Recommended Action
EPO	Externally triggered hardware EPO button or remotely triggered EPO command.	1. If it was actively triggered by a remote shutdown command, it can be ignored. 2. If not actively triggered, please contact the distributor or after-sales service center.
High Combustible Gas Concentration	Automatically triggered when the combustible gas device detects a concentration of 20% LEL or higher.	1. After the fault occurs, the unit will automatically open the air damper to exhaust and reduce the concentration. The fault will clear automatically after the concentration remains below 5% LEL for 15 minutes. 2. If the fault triggers a cluster-level fire protection fault, the air damper will automatically close. Confirm the damper status within 30s to ensure the cluster-level fire protection operates in an enclosed space. 3. Please contact the distributor or after-sales service center.
Mismatch Between Combustible Gas Device Air Damper Open Command and Feedback Signal	Mismatch between the control signal to open the air damper and the feedback signal.	1. Check the cable harness signal connection for issues. 2. Please contact the distributor or after-sales service center.
One-Key Shutdown	Check via the App if the one-key shutdown function is enabled.	Disable the one-key shutdown function.

Fault Name	Possible Cause	Recommended Action
Offline Shutdown	-	-
Remote Shutdown	-	-
On-Grid SPD Fault	-	1. Try restarting the unit and observe if the fault clears. 2. If the fault persists after restart, please contact the distributor or after-sales service center.
Off-Grid SPD Fault	-	1. Try restarting the unit and observe if the fault clears. 2. If the fault persists after restart, please contact the distributor or after-sales service center.
Child Node Communication Failure	Internal Comm Abnormal	1. Try restarting the unit and observe if the fault clears. 2. If the fault persists after restart, please contact the distributor or after-sales service center.
Dehumidifier Communication Fault	Communication link abnormality between the dehumidifier and the LC control box.	1. Check the communication cable harness for the link and observe if the fault clears. 2. Try restarting the unit and observe if the fault clears. 3. If the fault persists after restart, please contact the distributor or after-sales service center.

Fault Name	Possible Cause	Recommended Action
Combustible Gas Detection Device Communication Fault	1. The combustible gas device left the factory without the 485 address properly configured to 2. 2. Communication link abnormality between the combustible gas device and the LC control box.	1. Check the communication cable harness for the link and observe if the fault clears. 2. Try restarting the unit and observe if the fault clears. 3. Use the method provided by the combustible gas device manufacturer to check if the device address is 2. If not, modify it. 4. If the fault persists after restart, please contact the distributor or after-sales service center.
DG Communication Failure	Communication link abnormality between the control board and the diesel generator (DG).	1. Check the communication cable harness for the link and observe if the fault clears. 2. Try restarting the unit and observe if the fault clears. 3. If the fault persists after restart, please contact the distributor or after-sales service center.
Battery Over Voltage	1. Individual cell voltage too high. 2. Voltage sensing line abnormality.	Record the fault phenomenon, restart the battery, wait a few minutes, and confirm if the fault disappears. If the problem persists after restart, please contact the after-sales service center.
	1. Total battery voltage too high. 2. Voltage sensing line abnormality.	
Battery Undervoltage	1. Individual cell voltage too low. 2. Voltage sensing line abnormality.	

Fault Name	Possible Cause	Recommended Action
	1. Total battery voltage too low. 2. Voltage sensing line abnormality.	
Battery Overcurrent	1. Charging current too high, battery current limiting abnormality: sudden changes in temperature and voltage values. 2. Inverter response abnormal.	
	Battery discharge current too high.	
Battery Overtemperature	1. Ambient Overtemperature. 2. Temperature sensor abnormality.	
Battery Undertemperature	1. Ambient temperature too low. 2. Temperature sensor abnormality.	
Battery Terminal Overtemperature	Terminal temperature too high.	

Fault Name	Possible Cause	Recommended Action
Battery Imbalance	1. Large temperature difference. At different stages, the battery will limit its power, i.e., limit charge/discharge current. Therefore, this issue is generally difficult to occur. 2. Cell capacity degradation leads to excessive internal resistance, causing large temperature rise during overcurrent and thus a large temperature difference. 3. Poor welding of cell tabs leads to rapid cell temperature rise during overcurrent. 4. Temperature sampling issue. 5. Loose power cable connections.	

Fault Name	Possible Cause	Recommended Action
	1. Inconsistent cell aging levels. 2. Slave board chip issues can also cause excessive cell voltage difference. 3. Slave board balancing issues can also cause excessive cell voltage difference. 4. Caused by wiring harness issues.	
Insulation Resistance	Insulation resistance damaged.	Check if the ground wire is properly connected, restart the battery. If the problem persists after restart, please contact the after-sales service center.
Pre-charging Failure	Pre-charging Failure	Indicates that during pre-charging, the voltage across the pre-charge MOS always exceeds the specified threshold. Power off and restart, then observe if the fault persists. Check if the wiring is correct and if the pre-charge MOS is damaged.
Sensing Line Fault	Battery sensing line poor contact or disconnected.	Check the wiring, restart the battery. If the problem persists after restart, please contact the after-sales service center.
	Cell voltage sensing line poor contact or disconnected.	Check the wiring, restart the battery. If the problem persists after restart, please contact the after-sales service center.
	Cell temperature sensing line poor contact or disconnected.	

Fault Name	Possible Cause	Recommended Action
	Dual-channel current comparison error too large, or current sensing line circuit abnormal.	
	Dual-channel voltage comparison error too large, or MCU vs. AFE voltage comparison error too large, or voltage sensing line circuit abnormal.	
	Temperature sensing line circuit abnormal, poor contact, or disconnected.	
	Overvoltage level 5 or overtemperature level 5, tripping the three-terminal fuse.	The three-terminal fuse is blown. Please contact the after-sales service center to replace the main control board.
Relay or MOS Overtemperature	Relay or MOS overtemperature.	This fault indicates the MOS tube temperature exceeds the specified threshold. Power off and let it sit for 2 hours for temperature recovery.
Shunt Overtemperature	Shunt overtemperature.	This fault indicates the shunt temperature exceeds the specified threshold. Power off and let it sit for 2 hours for temperature recovery.

Fault Name	Possible Cause	Recommended Action
BMS1 Other Faults 1 (Residential Storage)	Relay or MOS open circuit.	1. Upgrade software, power off and let it sit for 5 minutes, restart and see if the fault persists. 2. If it persists, replace the battery pack.
	Relay or MOS short circuit.	1. Upgrade software, power off and let it sit for 5 minutes, restart and see if the fault persists. 2. If it persists, replace the battery pack.
	Communication abnormality between main cluster and slave cluster, or cell inconsistency between clusters.	1. Check the slave unit's battery information and software version, and if the communication cable connection to the master unit is normal. 2. Upgrade software.
	Battery system loop wiring harness abnormal, causing the interlock signal not to form a loop.	Check if the termination resistor is installed correctly.
	BMS and PCS communication abnormal.	1. Confirm if the communication cable interface definitions between the inverter and the connected battery are correct. 2. Please contact the after-sales service center to check backend data and observe if the inverter and battery software match correctly.
	BMS master and slave control communication cable harness abnormal.	1. Check wiring, restart the battery. 2. Upgrade the battery firmware. If the problem persists after restart, please contact the after-sales service center.

Fault Name	Possible Cause	Recommended Action
	Communication loss between main negative chips.	
	Circuit breaker, shunt trip abnormality.	1. Power off and let it sit for 5 minutes, restart and see if the fault persists. 2. Check if the communication pins on the PACK and PCU bottom blind-mate connectors are loose or misaligned.
	MCU self-test failure.	Upgrade software, restart the battery. If the problem persists after restart, please contact the after-sales service center.
	1. Software version too low or BMS board damaged. 2. Large number of parallel inverters, causing excessive inrush current during battery pre-charging.	1. Upgrade software, observe if the fault persists. 2. For parallel systems, perform a black start of the battery first, then start the inverters.
	MCU internal fault.	Upgrade software, restart the battery. This usually indicates MCU or external component damage. If the problem persists after restart, please contact the after-sales service center.
	Total control current exceeds the specified threshold.	1. Power off and let it sit for 5 minutes, restart and see if the fault persists. 2. Check if the inverter power setting is too high, exceeding the bus load capacity.

Fault Name	Possible Cause	Recommended Action
	Inconsistent cells in parallel battery clusters.	Confirm if the cells in the parallel battery clusters are consistent.
	Reverse polarity connection of parallel battery clusters.	Check if the positive and negative terminals of the parallel battery clusters are reversed.
	Severe overtemperature/overvoltage etc., triggering the fire protection system.	Contact the after-sales service center.
Air Conditioner Failure	Air conditioner abnormal failure.	Try restarting the system. If the fault is not resolved, please contact the after-sales service center.
	Cabinet door not closed.	Check if the cabinet door is properly closed.
	Supply voltage too high.	Confirm if the supply voltage meets the air conditioner input voltage requirements. Re-power on after confirmation.
	Insufficient supply voltage.	
	No voltage input.	
	Unstable supply voltage.	
	Compressor voltage unstable.	Try restarting the system. If the fault is not resolved, please contact the after-sales service center.
	Sensor poor contact or damaged.	
	Air conditioner fan abnormal.	

Fault Name	Possible Cause	Recommended Action
BMS1 Other Faults 2 (Residential Storage)	Internal voltage or current abnormality in DCDC.	Refer to specific DC fault content.
	DCDC overload or heatsink overtemperature, etc.	
	Cell sensing abnormality or inconsistent aging levels.	Please contact the after-sales service center.
	Fan operation not executed normally.	Please contact the after-sales service center.
	Output terminal screws loose or poor contact.	1. Power off the battery, check wiring and output terminal screw condition. 2. After confirmation, restart the battery, observe if the fault persists. If it persists, please contact the after-sales service center.
	Battery used for too long or cells severely damaged.	Please contact the after-sales service center to replace the pack.
	1. Software version too low or BMS board damaged. 2. Large number of parallel inverters, causing excessive inrush current during battery pre-charging.	1. Upgrade software, observe if the fault persists. 2. For parallel systems, perform a black start of the battery first, then start the inverters.
	Heating film damaged.	Please contact the after-sales service center.

Fault Name	Possible Cause	Recommended Action
	Heating film three-terminal fuse blown, heating function unavailable.	Please contact the after-sales service center.
	Software model, Cell Type, hardware model mismatch.	Check if the software model, SN, Cell Type, and hardware model are consistent. If not, please contact the after-sales service center.
	Thermal management board communication cable disconnected.	1. Power off and let it sit for 5 minutes, restart and see if the fault persists. 2. If the fault does not recover, contact after-sales to replace the pack.
	Pack fan fault signal triggered.	
DCDC Fault	Output port voltage too high.	Check the output port voltage. If the output port voltage is normal and the fault does not clear itself after restarting the battery, please contact the after-sales service center.
	DCDC module detects battery voltage exceeding maximum charging voltage.	Stop charging, discharge to below 90% SOC or let it sit for 2 hours. If ineffective and the fault persists after restart, please contact the after-sales service center.
	Heatsink temperature too high.	Let the battery sit for 1 hour for heatsink temperature to drop. If ineffective and the fault persists after restart, please contact the after-sales service center.
	Battery discharge current too high.	Check if the load exceeds the battery's discharge capability. Turn off the load or stop PCS operation for 60s. If ineffective and the fault persists after restart, please contact the after-sales service center.

Fault Name	Possible Cause	Recommended Action
	Output port power cable positive/negative reversed with parallel cluster battery or PCS.	Turn off the battery manual switch, check if the output port wiring is correct, restart the battery.
	Output power relay cannot close.	Check if the output port wiring is correct and if there is a short circuit. If ineffective and the fault persists after restart, please contact the after-sales service center.
	Power device temperature too high.	Let the battery sit for 1 hour for internal power device temperature to drop. If ineffective and the fault persists after restart, please contact the after-sales service center.
	Relay welded/stuck.	If the fault persists after restart, please contact the after-sales service center.
Battery Rack Circulating Current Failure	1. Cell imbalance. 2. First power-on without full charge calibration.	Record the fault phenomenon, restart the battery, wait a few minutes, and confirm if the fault disappears. If the problem persists after restart, please contact the after-sales service center.
BMS1 Other Faults 3 (Large-scale Storage)	Communication abnormal with Linux module.	1. Check if the communication cable connection is normal. 2. Upgrade software, restart the battery and observe if the fault persists. If it persists, please contact the after-sales service center.
	Cell temperature rise too fast.	Cell abnormal, contact after-sales to replace the pack.
	SOC below 10%.	Charge the battery.

Fault Name	Possible Cause	Recommended Action
	SN written does not comply with rules.	Check if the SN digit count is normal. If abnormal, please contact the after-sales service center.
	1. Communication abnormal within battery cluster daisy chain. 2. Inconsistent cell aging levels between battery clusters.	1. Check the pack contact condition within a single cluster battery. 2. Confirm the usage of each cluster battery, such as accumulated charge/discharge capacity, cycle count, etc. 3. Please contact the after-sales service center.
	High humidity inside pack.	-
	Fuse blown.	Contact after-sales to replace the pack.
	Battery low power.	Charge the battery.
BMS1 Other Faults 4 (Large-scale Storage)	Circuit breaker abnormal.	Contact after-sales to replace the pack.
	External device abnormal.	Contact after-sales to replace the pack.
Contactor Failure 1	-	-
Contactor Failure 2	-	-
Overload Protection (Ksic)	Sustained overload (exceeding 690KVA) for 10s.	Please contact the after-sales service center.
Overload Protection (Smart Port)	Sustained overload (exceeding 690KVA) for 10s.	Please contact the after-sales service center.

Fault Name	Possible Cause	Recommended Action
Overcurrent Protection (Ksic)	-	-
Overcurrent Protection (Smart Port)	-	-
Master AC On Meter Comm Error	1. Possibly the meter is not connected to the master. 2. Possibly the meter communication cable is loose.	1. Check if the meter is connected to the master. 2. Check if the meter communication cable is loose.
Parallel Slave Meter Error	Meter connected to a slave unit.	Set the unit with the meter connected as the master.
Slave AC On Timeout with Master	1. Slave address setting error. 2. Slave communication cable loose.	1. Check if the slave addresses are duplicated. 2. Check if the parallel communication cable is loose.

8.5.2.3 Battery Fault

- **Lynx C Series 60kWh Commercial & Industrial Battery System**

No.	Fault Name	Possible Cause	Troubleshooting
1	Battery Over Voltage	Continuing to charge when the battery is fully charged	Stop charging. If not automatically restored, contact a professional technician to restart the system.

No.	Fault Name	Possible Cause	Troubleshooting
2	Battery Undervoltage	Continuing to discharge when the battery is fully discharged	Stop discharging. If not automatically restored, contact a professional technician to restart the system.
3	Battery Overcurrent	Current exceeding the system's maximum current during charge/discharge	Reduce power. If not automatically restored, contact a professional technician to restart the system.
4	Battery Overtemperature	Temperature too high during charge/discharge	Perform cooling. If not automatically restored, contact a professional technician to restart the system.
5	Battery Undertemperature	Temperature too low during charge/discharge	Perform heating. If not automatically restored, contact a professional technician to restart the system.
6	Battery Terminal Overtemperature	Temperature too high during charge/discharge	Perform cooling. If not automatically restored, contact a professional technician to restart the system.
7	Battery Imbalance	Excessive temperature or voltage difference between individual cells	Stop charge/discharge to allow temperature recovery. Perform balancing if voltage difference is excessive.
8	Insulation Resistance	System insulation resistance is low	Check grounding condition.
9	Precharge Failure	Precharge circuit component damage	Check precharge circuit components.
10	Harness Fault	Abnormal voltage, temperature, or current sensing harness	Check the corresponding harness.
11	Relay Open Circuit	Relay Failure	Replace the relay.

No.	Fault Name	Possible Cause	Troubleshooting
12	Relay Short Circuit	Relay Failure	Replace the relay.
13	Cluster Parallel Fault	Slave cluster loss of communication	Check the reliability of the master-slave harness connection.
14	PCS Comm Loss	Abnormal communication harness with PCS	Check the reliability of the harness connection.
15	BMU Communication Fault	Abnormal communication harness between BCU and BMU	Check the reliability of the harness connection.
16	Circuit Breaker Sticking Fault	Molded case circuit breaker failure	Replace the molded case circuit breaker.
17	Fire Protection System Triggered	Thermal runaway inside the system	Please contact the after-sales service center.
18	Air Conditioner Failure	Abnormal fault occurred within the air conditioning system	Please contact the after-sales service center.

- **BAT-S Series 15.3-56.3kWh High Voltage Battery**

No.	Fault Name	Possible Causes	Troubleshooting
1	Charging Overvoltage2	• Cell voltage/total voltage too high • Voltage sampling line abnormal	1. Power off and let it sit for 5 minutes, then restart to see if the fault persists; 2. If the fault is not resolved, contact GoodWe after-sales service.

No.	Fault Name	Possible Causes	Troubleshooting
2	Charging Overvoltage3	• Cell voltage/total voltage too high • Voltage sampling line abnormal	1. Power off and let it sit for 5 minutes, then restart to see if the fault persists; 2. If the fault is not resolved, contact GoodWe after-sales service.
3	Discharge Undervoltage3	• Cell voltage/total voltage too low • Voltage sampling line abnormal	1. Power off and let it sit for 5 minutes, then restart to see if the fault persists; 2. Determine the inverter's working status, check if it is not charging the battery due to working mode or other issues. Try charging the battery via the inverter and observe if the fault is resolved. 3. If the fault is not resolved, contact GoodWe after-sales service.
4	Discharge Undervoltage2	• Cell voltage/total voltage too low • Voltage sampling line abnormal	1. Power off and let it sit for 5 minutes, then restart to see if the fault persists; 2. Determine the inverter's working status, check if it is not charging the battery due to working mode or other issues. Try charging the battery via the inverter and observe if the fault is resolved. 3. If the fault is not resolved, contact GoodWe after-sales service.

No.	Fault Name	Possible Causes	Troubleshooting
5	Cell Overvoltage2	• Cell voltage/total voltage too high • Voltage sampling line abnormal	1. Power off and let it sit for 5 minutes, then restart to see if the fault persists; If the fault is not resolved, contact GoodWe after-sales service.
6	Cell Undervoltage2	Cell undervoltage	1. Power off and let it sit for 5 minutes, then restart to see if the fault persists; 2. Determine the inverter's working status, check if it is not charging the battery due to working mode or other issues. Try charging the battery via the inverter and observe if the fault is resolved. 3. If the fault is not resolved, contact GoodWe after-sales service.
7	Significant Cell Voltage Variation2	Significant cell voltage variation	1. Restart the battery and wait for 12 hours. 2. If the fault is not resolved, contact GoodWe after-sales service.

No.	Fault Name	Possible Causes	Troubleshooting
8	Charging Overcurrent2	• Charging current too high, battery current limiting abnormal: sudden changes in temperature and voltage values • Inverter response abnormal	1. Power off and let it sit for 5 minutes, then restart to see if the fault persists; 2. Check if the inverter power setting is too high, causing it to exceed the battery's rated operating current; 3. If the fault is not resolved, contact GoodWe after-sales service.
9	Discharge Overcurrent2	• Discharge current too high, battery current limiting abnormal: sudden changes in temperature and SOC values • Inverter response abnormal	
10	Battery Cell High Temperature2	• Cell temperature too high • Temperature sensor abnormal	1. Power off and let it sit for 30 minutes, then restart to see if the fault persists; 2. If the fault is not resolved, contact GoodWe after-sales service.

No.	Fault Name	Possible Causes	Troubleshooting
11	Battery Cell Low Temperature2	• Ambient temperature too low • Temperature sensor abnormal	1. Power off and let it sit for 30 minutes, then restart to see if the fault persists; 2. If the fault is not resolved, contact GoodWe after-sales service.
12	Charging Overtemperature2	• Cell temperature too high • Temperature sensor abnormal	1. Power off and let it sit for 30 minutes; then restart to see if the fault persists; 2. If the fault is not resolved, contact GoodWe after-sales service.
13	Charging Low Temperature2	• Ambient temperature too low • Temperature sensor abnormal	1. Power off and let it sit for 30 minutes; then restart to see if the fault persists; 2. If the fault is not resolved, contact GoodWe after-sales service.
14	Discharge Overtemperature2	• Cell temperature too high • Temperature sensor abnormal	1. Power off and let it sit for 30 minutes; then restart to see if the fault persists; 2. If the fault is not resolved, contact GoodWe after-sales service.

No.	Fault Name	Possible Causes	Troubleshooting
15	Discharge Low Temperature2	• Ambient temperature too low • Temperature sensor abnormal	1. Power off and let it sit for 30 minutes; then restart to see if the fault persists; 2. If the fault is not resolved, contact GoodWe after-sales service.
16	Significant Cell Temperature Variation2	Significant cell temperature variation	1. Power off and let it sit for 30 minutes; then restart to see if the fault persists; 2. If the fault is not resolved, contact GoodWe after-sales service.
17	Precharge Disabled	Precharge MOS closure failure	1. Power off and let it sit for 5 minutes, then restart to see if the fault persists; 2. If the fault is not resolved, contact GoodWe after-sales service.
18	Battery Tripping	Battery Trip	1. Let it sit for 10 minutes, then re-close to recover; 2. If the fault is not resolved, contact GoodWe after-sales service.

No.	Fault Name	Possible Causes	Troubleshooting
19	Battery and Inverter Comm Failure	Battery and Inverter Comm Failure	1. Confirm the communication cable wiring sequence and DC cable are correct, and check for continuity. 2. Restart the inverter and battery. 3. If the fault is not resolved, contact GoodWe after-sales service.
20	Specific Failures	Battery specific failure	Please contact the after-sales service center.
21	Cluster Parallel Fault	Slave cluster loss of communication Cluster parallel failure	Check the reliability of the master-slave harness communication connection; Please contact the after-sales service center.
22	Application Software Fault	Software self-test failure	Please contact the after-sales service center.
23	Microelectronics Fault	Electronic component failure	Please contact the after-sales service center.
24	Master Control Overload	Exceeds power line capacity range	Stop charging. If it does not recover automatically, please contact a professional technician to restart the system.
25	SN Abnormal	Batteries with identical SN exist	Please contact the after-sales service center.
26	Circuit Breaker Abnormal	Molded case circuit breaker abnormal trip	Replace the molded case circuit breaker.

- **BAT-C Series 61.4-112.6kWh Commercial & Industrial Battery System**

No.	Fault Name	Possible Cause	Troubleshooting
1	Charging Overvoltage2	• Excessive cell voltage/total voltage • Abnormal voltage sensing line	1. Leave the unit powered off and idle for 5 minutes, then restart and check if the fault persists; 2. If the fault is not resolved, contact GoodWe after-sales service.
2	Charging Overvoltage3	• Excessive cell voltage/total voltage • Abnormal voltage sensing line	1. Leave the unit powered off and idle for 5 minutes, then restart and check if the fault persists; 2. If the fault is not resolved, contact GoodWe after-sales service.
3	Discharge Undervoltage3	• Insufficient cell voltage/total voltage • Abnormal voltage sensing line	1. Leave the unit powered off and idle for 5 minutes, then restart and check if the fault persists; 2. Determine the inverter's working status, check if it is not charging the battery due to issues like working mode, and try charging the battery via the inverter to observe if the fault is resolved. 3. If the fault is not resolved, contact GoodWe after-sales service.

No.	Fault Name	Possible Cause	Troubleshooting
4	Discharge Undervoltage2	• Insufficient cell voltage/total voltage • Abnormal voltage sensing line	1. Leave the unit powered off and idle for 5 minutes, then restart and check if the fault persists; 2. Determine the inverter's working status, check if it is not charging the battery due to issues like working mode, and try charging the battery via the inverter to observe if the fault is resolved. 3. If the fault is not resolved, contact GoodWe after-sales service.
5	Cell Overvoltage2	• Excessive cell voltage/total voltage • Abnormal voltage sensing line	1. Leave the unit powered off and idle for 5 minutes, then restart and check if the fault persists; If the fault is not resolved, contact GoodWe after-sales service.
6	Cell Undervoltage2	Cell undervoltage	1. Leave the unit powered off and idle for 5 minutes, then restart and check if the fault persists; 2. Determine the inverter's working status, check if it is not charging the battery due to issues like working mode, and try charging the battery via the inverter to observe if the fault is resolved. 3. If the fault is not resolved, contact GoodWe after-sales service.

No.	Fault Name	Possible Cause	Troubleshooting
7	Significant Cell Voltage Variation2	Significant cell voltage variation	1. Restart the battery and wait for 12 hours. 2. If the fault is not resolved, contact GoodWe after-sales service.
8	Charging Overcurrent2	• Excessive charging current, abnormal battery current limiting: Sudden changes in temperature and voltage values • Abnormal inverter response	1. Leave the unit powered off and idle for 5 minutes, then restart and check if the fault persists; 2. Check if the inverter is set to an excessive power level, causing it to exceed the battery's rated operating current; 3. If the fault is not resolved, contact GoodWe after-sales service.
9	Discharge Overcurrent2	• Excessive discharge current, abnormal battery current limiting: Sudden changes in temperature and SOC values • Abnormal inverter response	
10	Battery Cell High Temperature2	• Excessive cell temperature • Abnormal temperature sensor	1. Leave the unit powered off and idle for 30 minutes, then restart and check if the fault persists; 2. If the fault is not resolved, contact GoodWe after-sales service.

No.	Fault Name	Possible Cause	Troubleshooting
11	Battery Cell Low Temperature2	• Excessively low ambient temperature • Abnormal temperature sensor	1. Leave the unit powered off and idle for 30 minutes, then restart and check if the fault persists; 2. If the fault is not resolved, contact GoodWe after-sales service.
12	Charging Overtemperature2	• Excessive cell temperature • Abnormal temperature sensor	1. Leave the unit powered off and idle for 30 minutes; then restart and check if the fault persists; 2. If the fault is not resolved, contact GoodWe after-sales service.
13	Charging Low Temperature2	• Excessively low ambient temperature • Abnormal temperature sensor	1. Leave the unit powered off and idle for 30 minutes; then restart and check if the fault persists; 2. If the fault is not resolved, contact GoodWe after-sales service.
14	Discharge Overtemperature2	• Excessive cell temperature • Abnormal temperature sensor	1. Leave the unit powered off and idle for 30 minutes; then restart and check if the fault persists; 2. If the fault is not resolved, contact GoodWe after-sales service.

No.	Fault Name	Possible Cause	Troubleshooting
15	Discharge Low Temperature2	• Excessively low ambient temperature • Abnormal temperature sensor	1. Leave the unit powered off and idle for 30 minutes; then restart and check if the fault persists; 2. If the fault is not resolved, contact GoodWe after-sales service.
16	Significant Cell Temperature Variation2	Significant cell temperature variation	1. Leave the unit powered off and idle for 30 minutes; then restart and check if the fault persists; 2. If the fault is not resolved, contact GoodWe after-sales service.
17	Precharge Disabled	Precharge MOS closing failure	1. Leave the unit powered off and idle for 5 minutes, then restart and check if the fault persists; 2. If the fault is not resolved, contact GoodWe after-sales service.
18	Battery Tripping	Battery Trip	1. Leave idle for 10 minutes, then re-close to recover; 2. If the fault is not resolved, contact GoodWe after-sales service.

No.	Fault Name	Possible Cause	Troubleshooting
19	Battery and Inverter Comm Failure	Battery and Inverter Comm Failure	1. Confirm the communication cable wiring sequence and DC cable are correct, and check for continuity. 2. Restart the inverter and the battery. 3. If the fault is not resolved, contact GoodWe after-sales service.
20	Specific Failures	Battery specific failure	Please contact the after-sales service center.
21	Cluster Parallel Failure	Slave cluster loss of communication Cluster parallel failure	Check the reliability of the master-slave harness communication connection Please contact the after-sales service center.
22	Application Software Failure	Software self-test failure	Please contact the after-sales service center
23	Microelectronic Failure	Electronic component failure	Please contact the after-sales service center
24	Main Control Overload	Exceeding the power line's load capacity	Stop charging. If it does not recover automatically, please contact a professional technician to restart the system.
25	SN Anomaly	Existence of batteries with identical SN	Please contact the after-sales service center
26	Circuit Breaker Anomaly	Molded case circuit breaker abnormal trip	Replace the molded case circuit breaker

No.	Fault Name	Possible Cause	Troubleshooting
27	Circuit Breaker Welding Fault	Molded case circuit breaker fault or auxiliary circuit breaker fault	Replace the molded case circuit breaker or replace the auxiliary circuit breaker
28	Fire Suppression System Triggered	Internal system thermal runaway or accidental fire suppression trigger	Please contact the after-sales service center
29	Air Conditioner Fault	Abnormal fault occurred within the air conditioning system	Please contact the after-sales service center
30	Door Access Fault	Door abnormally opened or door access sensor damaged	Close the door or replace the door access sensor
31	Emergency Stop Triggered	Emergency stop pressed or emergency stop button damaged	Replace the emergency stop button
32	PACK Fan Fault	PACK fan locked rotor or unable to operate	Replace the corresponding PACK fan

8.5.3 Post-Fault Clearance Processing

In an energy storage system, after certain faults are handled, additional processing is required for the system to resume normal operation.

8.5.3.1 Clear AFCI Fault Warning

Software Used: SolarGo APP
Clear Method:

1. Via **[Home]** > **[Settings]** > **[Advanced Settings]** > **[DC Arc Detection]**.
2. Click the **[Clear AFCI Fault Alarm]** button.

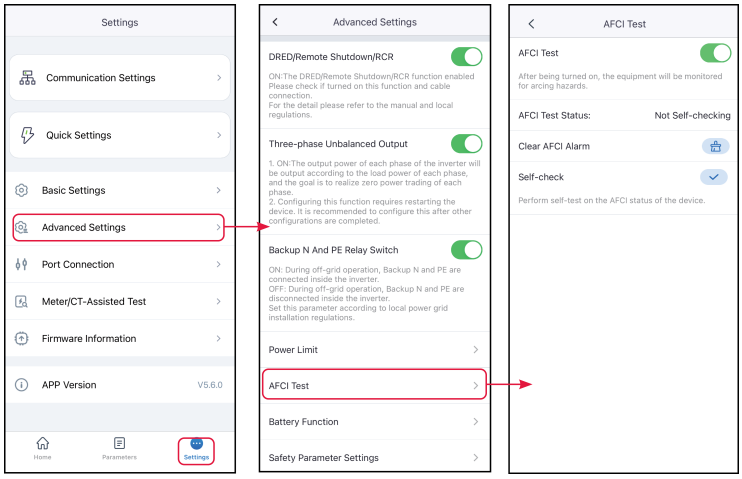

9 technical parameter

9.1 Inverter Parameters

Technical Data	GW15K-ET	GW20K-ET	GW25K-ET	GW29.9K-ET	GW30K-ET
Battery Input Data					
Battery Type	Li-Ion	Li-Ion	Li-Ion	Li-Ion	Li-Ion
Nominal Battery Voltage (V)	500	500	500	500	500
Battery voltage range (V)	200~800	200~800	200~800	200~800	200~800
Start-up Voltage (V)	200	200	200	200	200
Number of Battery Input	1	1	2	2	2
Max. Continuous Charging Current (A)	50	50	50×2	50×2	50×2
Max. Continuous Discharging Current (A)	50	50	50×2	50×2	50×2
Max Charge Power (W)	15000	20000	25000	30000	30000
Max Discharge Power (W)	15000	20000	25000	30000	30000
PV String Input Data					
Max. Input Power (W)*1	22500	30000	37500	45000	45000
Max. Input Voltage (V)*2	1000	1000	1000	1000	1000
MPPT Operating Voltage Range (V)	200~850	200~850	200~850	200~850	200~850
MPPT Voltage Range at Nominal Power (V)	400~850	400~850	450~850	450~850	450~850
Start-up Voltage (V)	200	200	200	200	200

Technical Data	GW15K-ET	GW20K-ET	GW25K-ET	GW29.9K-ET	GW30K-ET
Nominal Input Voltage (V)	620	620	620	620	620
Max. Input Current per MPPT (A)	30	30	30	30	30
Max. Short Circuit Current per MPPT (A)	38	38	38	38	38
Max. Backfeed Current to The Array (A)	0	0	0	0	0
Number of MPPT	2	2	3	3	3
Number of Strings per MPPT	2/2	2/2	2/2/2	2/2/2	2/2/2
AC Output Data (On-grid)					
Nominal Output Power (W)	15000	20000	25000	29900	30000
Max. Output Power (W)	15000	20000	25000	29900	30000
Nominal Output Power at 40 ℃(W) *14	15000	20000	25000	29900	30000
Max. Output Power at 40 ℃ (W)*14	15000	20000	25000	29900	30000
Nominal Apparent Power Output to Utility Grid (VA)	15000	20000	25000	29900	30000
Max. Apparent Power Output to Utility Grid (VA)*3 *15	16500	22000	27500	29900	33000
Nominal Apparent Power from Utility Grid(VA)	15000	20000	25000	30000	30000
Max. Apparent Power from Utility Grid (VA) *12	15000	20000	25000	30000	30000

Technical Data	GW15K-ET	GW20K-ET	GW25K-ET	GW29.9K-ET	GW30K-ET
Nominal Output Voltage (V)	380/400, 3L/N/PE	380/400, 3L/N/PE	380/400, 3L/N/PE	380/400, 3L/N/PE	380/400, 3L/N/PE
Output Voltage Range (V)*4	0~300	0~300	0~300	0~300	0~300
Nominal AC Grid Frequency (Hz)	50/60	50/60	50/60	50/60	50/60
AC Grid Frequency Range (Hz)	45~65	45~65	45~65	45~65	45~65
Max. AC Current Output to Utility Grid (A) *11	23.9	31.9	39.9	43.3	47.8
Max. AC Current From Utility Grid (A) *13	22.7	30.3	37.9	45.3	45.5
Nominal AC Current From Utility Grid (A)	21.7 @230V 22.7 @220V	29.0 @230V 30.3 @220V	36.2 @230V 37.9 @220V	43.3 @230V 45.3 @220V	43.5 @230V 45.5 @220V
Max. Output Fault Current (Peak and Duration) (A)	241.5A@126ms	241.5A@126ms	241.5A@126ms	241.5A@126ms	241.5A@126ms
Inrush Current (Peak and Duration) (A)	264A@53us	264A@53us	264A@53us	264A@53us	264A@53us
Nominal Output Current (A)*5	21.7	29	36.2	43.3	43.5

Technical Data	GW15K-ET	GW20K-ET	GW25K-ET	GW29.9K-ET	GW30K-ET
Power Factor	~1 (Adjustable from0.8 leading~0.8 lagging)	~1 (Adjustable from0.8 leading~0.8 lagging)	~1 (Adjustable from0.8 leading~0.8 lagging)	~1 (Adjustable from0.8 leading~0.8 lagging)	~1 (Adjustable from0.8 leading~0.8 lagging)
Max. Total Harmonic Distortion	≤3.05%	≤3.05%	≤3.05%	≤3.05%	≤3.05%
Maximum Output Overcurrent Protection (A)	94	94	94	94	94
AC Output Data (Back-up)					
Back-up Nominal Apparent Power (VA)	15000	20000	25000	29900	30000
Max. Output Apparent Power without Grid(VA)*6	15,000(18,000@60s , 24,000@3s)	20,000(24,000@60s , 32,000@3s)	25,000(30,000@60s)	30,000(36,000@60s)	30,000(36,000@60s)
Max. Output Apparent Power with Grid (VA)	15000	20000	25000	29900	30000
Nominal Output Current (A)	22.7	30.3	37.9	45.5	45.5
Max. Output Current (A)	22.7(27.3@60s, 36.4@3s)	30.3(36.4@60s, 48.5@3s)	37.9(45.5@60s)	45.5(54.5@60s)	45.5(54.5@60s)
Max. Output Fault Current (Peak and Duration) (A)	94	94	94	94	94

Technical Data	GW15K-ET	GW20K-ET	GW25K-ET	GW29.9K-ET	GW30K-ET
Inrush Current (Peak and Duration) (A)	264@53us	264@53us	264@53us	264@53us	264@53us
Maximum Output Overcurrent Protection (A)	94	94	94	94	94
Nominal Output Voltage (V)	380/400	380/400	380/400	380/400	380/400
Nominal Output Frequency (Hz)	50/60	50/60	50/60	50/60	50/60
Output THDv (@Linear Load)	<3%	<3%	<3%	<3%	<3%
Efficiency					
Max. Efficiency	98.0%	98.0%	98.0%	98.0%	98.0%
European Efficiency	97.5%	97.5%	97.5%	97.5%	97.5%
Max. Battery to AC Efficiency	97.5%	97.5%	97.5%	97.5%	97.5%
MPPT Efficiency	99.9%	99.9%	99.9%	99.9%	99.9%
Protection					
PV String Current Monitoring	Integrated	Integrated	Integrated	Integrated	Integrated
PV Insulation Resistance Detection	Integrated	Integrated	Integrated	Integrated	Integrated
Residual Current Monitoring	Integrated	Integrated	Integrated	Integrated	Integrated
PV Reverse Polarity Protection	Integrated	Integrated	Integrated	Integrated	Integrated
Battery Reverse Polarity Protection	Integrated	Integrated	Integrated	Integrated	Integrated

Technical Data	GW15K-ET	GW20K-ET	GW25K-ET	GW29.9K-ET	GW30K-ET
Anti-islanding Protection	Integrated	Integrated	Integrated	Integrated	Integrated
AC Overcurrent Protection	Integrated	Integrated	Integrated	Integrated	Integrated
AC Short Circuit Protection	Integrated	Integrated	Integrated	Integrated	Integrated
AC Overvoltage Protection	Integrated	Integrated	Integrated	Integrated	Integrated
DC Switch*7	Integrated	Integrated	Integrated	Integrated	Integrated
DC Surge Protection	Type II	Type II	Type II	Type II	Type II
AC Surge Protection	Type III	Type III	Type III	Type III	Type III
AFCI*16	Optional	Optional	Optional	Optional	Optional
Rapid Shutdown	Optional	Optional	Optional	Optional	Optional
Remote Shutdown	Integrated	Integrated	Integrated	Integrated	Integrated
General Data					
Operating Temperature Range (℃)	-35~+60	-35~+60	-35~+60	-35~+60	-35~+60
Operating Environment	Outdoor	Outdoor	Outdoor	Outdoor	Outdoor
Relative Humidity	0 ~ 95%	0 ~ 95%	0 ~ 95%	0 ~ 95%	0 ~ 95%
Max. Operating Altitude (m)	4000	4000	4000	4000	4000
Cooling Method	Smart Fan Cooling	Smart Fan Cooling	Smart Fan Cooling	Smart Fan Cooling	Smart Fan Cooling

Technical Data	GW15K-ET	GW20K-ET	GW25K-ET	GW29.9K-ET	GW30K-ET
Display	LED, WLAN+APP	LED, WLAN+APP	LED, WLAN+APP	LED, WLAN+APP	LED, WLAN+APP
Communication with BMS	RS485 / CAN	RS485 / CAN	RS485 / CAN	RS485 / CAN	RS485 / CAN
Communication with Meter	RS485	RS485	RS485	RS485	RS485
Communication with Portal	WiFi+LAN+Bluetooth	WiFi+LAN+Bluetooth	WiFi+LAN+Bluetooth	WiFi+LAN+Bluetooth	WiFi+LAN+Bluetooth
Weight (kg)	48	48	54	54	54
Dimension W×H×D (mm)	520×660×220	520×660×220	520×660×220	520×660×220	520×660×220
Noise Emission (dB)	<45	<45	<45	<60	<60
Topology	Non-isolated	Non-isolated	Non-isolated	Non-isolated	Non-isolated
Self-consumption at Night (W) *8	<15	<15	<15	<15	<15
Ingress Protection Rating	IP66	IP66	IP66	IP66	IP66
DC Connector	Stäubli Electrical Connectors AG	Stäubli Electrical Connectors AG	Stäubli Electrical Connectors AG	Stäubli Electrical Connectors AG	Stäubli Electrical Connectors AG
AC Connector	OT	OT	OT	OT	OT
Environmental Category	4K4H	4K4H	4K4H	4K4H	4K4H
Pollution Degree	III	III	III	III	III
Overvoltage Category	DC II / AC III	DC II / AC III	DC II / AC III	DC II / AC III	DC II / AC III

Technical Data	GW15K-ET	GW20K-ET	GW25K-ET	GW29.9K-ET	GW30K-ET
Protective Class	I	I	I	I	I
Storage Temperature (°C)	-45~+85	-45~+85	-45~+85	-45~+85	-45~+85
The Decisive Voltage Class (DVC)	Battery：C PV：C AC：C Com：A	Battery：C PV：C AC：C Com：A	Battery：C PV：C AC：C Com：A	Battery：C PV：C AC：C Com：A	Battery：C PV：C AC：C Com：A
Mounting Method	Wall Mounted	Wall Mounted	Wall Mounted	Wall Mounted	Wall Mounted
Active Anti-islanding Method	AFDPF + AQDPF *9	AFDPF + AQDPF *9	AFDPF + AQDPF *9	AFDPF + AQDPF *9	AFDPF + AQDPF *9
Type of Electrical Supply System	Three phase Grid	Three phase Grid	Three phase Grid	Three phase Grid	Three phase Grid
Country of Manufacture	China	China	China	China	China

*1: In Australia, for most PV modules, the max. input power can achieve 2*Pn. For example, the max. input power of the GW15K-ET can achieve 30000W. Additionally, the Max. Input Power is not continuous for 1.5*normal power.
*2: For a 1000V system, the maximum operating voltage is 950V.
*3: According to local grid regulations.
*4: Output Voltage Range: phase voltage.
*5: For a 380V grid, the Nominal Output Current is 22.7A for GW15K-ET, 30.3A for GW20K-ET, 37.9A for GW25K-ET, 45.3A for GW29.9K-ET, and 45.5A for GW30K-ET.
*6: Can only be reached if PV and battery power are sufficient.
*7: DC Switch: GHX6-55P (for Australia).
*8: No Backup Output.
*9: AFDPF: Active Frequency Drift with Positive Feedback, AQDPF: Active Q Drift with Positive Feedback.
*10: Not all certifications & standards are listed; check the official website for details.

*11: For a 380V grid, the Max. AC Current Output to Utility Grid is 25A for GW15K-ET, 33.3A for GW20K-ET, 41.7A for GW25K-ET, 49.8A for GW29.9K-ET, and 50A for GW30K-ET.
*12: When the load is connected to the inverter's backup port, the Max. Apparent Power from Utility Grid can reach 22.5kVA for GW15K-ET, 30kVA for GW20K-ET, 33kVA for GW25K-ET, 33kVA for GW29.9K-ET, and 33kVA for GW30K-ET respectively.
*13: When the load is connected to the inverter's backup port, the Max. AC Current From Utility Grid can reach 34A for GW15K-ET, 45A for GW20K-ET, 50A for GW25K-ET, 50A for GW29.9K-ET, and 50A for GW30K-ET respectively.
*14: Nominal Output Power at 40℃(W) and Max. Output Power at 40℃(W) are only for Brazil.
*15: For Austria, Max. Output Power (W) is 15K for GW15K-ET, 20K for GW20K-ET, 25K for GW25K-ET, 29.9K for GW29.9K-ET, and 30K for GW30K-ET.
*16: For Brazil, AFCI is integrated.

Technical Data	GW12KL-ET	GW18KL-ET	GW20K-ET	GW30K-ET
Battery Input Data				
Battery Type	Li-Ion	Li-Ion	Li-Ion	Li-Ion
Nominal Battery Voltage (V)	500	500	500	500
Battery Voltage Range (V)	112~650	112~650	200~800	200~800
Start-up Voltage (V)	112	112	180	180
Number of Battery Input	1	2	1	2
Max. Continuous Charging Current (A)	50	50*2	50	50*2
Max. Continuous Discharging Current (A)	50	50*2	50	50*2
Max Charge Power (kW)	12	18	20	30
Max Discharge Power (kW)	12	18	20	30
PV String Input Data				

Technical Data	GW12KL-ET	GW18KL-ET	GW20K-ET	GW30K-ET
Max. Input Power (kW)	24	36	30	45
Max. Input Voltage (V)*1	800	800	1000	1000
MPPT Operating Voltage Range (V)	200~650	200~650	200~850	200~850
MPPT Voltage Range at Nominal Power (V)	260~650	260~650	400~850	450~850
Start-up Voltage (V)	200	200	200	200
Nominal Input Voltage (V)	380	380	620	620
Max. Input Current per MPPT (A)	30	30	30	30
Max. Short Circuit Current per MPPT (A)	38	38	38	38
Max. Backfeed Current to The Array (A)	0	0	0	0
Number of MPPT Trackers	2	3	2	3
Number of Strings per MPPT	2/2	2/2/2	2/2	2/2/2
AC Output Data (On-grid)				
Nominal Output Power (kW)	12	18	20	30
Max. Output Power (kW)	12	18	20	30
Nominal Output Power at 40 ℃(kW) *8	12	18	20	30
Max. Output Power at 40 ℃ (kW)*8	12	18	20	30

Technical Data	GW12KL-ET	GW18KL-ET	GW20K-ET	GW30K-ET
Nominal Apparent Power Output to Utility Grid (kVA)	12	18	20	30
Max. Apparent Power Output to Utility Grid (kVA)	13.2	19.8	22	33
Nominal Apparent Power from Utility Grid(kVA)	12	18	20	30
Max. Apparent Power from Utility Grid (kVA) *6	12	18	20	30
Nominal Output Voltage (V)	220, 3L/N/PE	220, 3L/N/PE	380, 3L/N/PE	380, 3L/N/PE
Output Voltage Range (V)*2	0~165	0~165	0~300	0~300
Nominal AC Grid Frequency (Hz)	60	60	60	60
AC Grid Frequency Range (Hz)	55~65	55~65	45~65	45~65
Max. AC Current Output to Utility Grid (A)	34.6	52	33.3	50
Max. AC Current From Utility Grid (A) *7	31.5	47	30.3	45.5
Nominal AC Current From Utility Grid (A)	31.5	47	30.3	45.5
Max. Output Fault Current (Peak and Duration) (A)	241.5A@126 ms	241.5A@126 ms	241.5A@126 ms	241.5A@126 ms
Inrush Current (Peak and Duration) (A)	264A@53us	264A@53us	264A@53us	264A@53us
Nominal Output Current (A)	31.5	47	30.3	45.5

Technical Data	GW12KL-ET	GW18KL-ET	GW20K-ET	GW30K-ET
Power Factor	~1 (Adjustable from0.8 leading~0.8 lagging)	~1 (Adjustable from0.8 leading~0.8 lagging)	~1 (Adjustable from0.8 leading~0.8 lagging)	~1 (Adjustable from0.8 leading~0.8 lagging)
Max. Total Harmonic Distortion	<3%	<3%	<3%	<3%
Maximum Output Overcurrent Protection (A)	94	94	94	94
AC Output Data (Back-up)				
Back-up Nominal Apparent Power (kVA)	12	18	20	30
Max. Output Apparent Power without Grid(kVA)*3	12.0(14.4@60s , 19.2@3s)	18.0(21.6@60s)	20.0(24.0@60s , 32.0@3s)	30.0(36.0@60s)
Max. Output Apparent Power with Grid (kVA)	12	18	20	30
Nominal Output Current (A)	31.5	47	30.3	45.5
Max. Output Current (A)	31.5(37.8@60s, 50.4@3s)	47(56.4@60s)	30.3(36.4@60s, 48.5@3s)	45.5(54.5@60s)
Max. Output Fault Current (Peak and Duration) (A)	94	94	94	94
Inrush Current (Peak and Duration) (A)	264@53us	264@53us	264@53us	264@53us
Maximum Output Overcurrent Protection (A)	94	94	94	94

Technical Data	GW12KL-ET	GW18KL-ET	GW20K-ET	GW30K-ET
Nominal Output Voltage (V)	220, 3L/N/PE	220, 3L/N/PE	380, 3L/N/PE	380, 3L/N/PE
Nominal Output Frequency (Hz)	60	60	60	60
Output THDv (@Linear Load)	<3%	<3%	<3%	<3%
Switching from Grid Connected Mode to Standalone Mode	20ms	20ms	20ms	20ms
Switching from standalone mode to Grid connected mode	20ms	20ms	20ms	20ms
Efficiency				
Max. Efficiency	98.0%	98.0%	98.0%	98.0%
European Efficiency	97.5%	97.5%	97.5%	97.5%
Max. Battery to AC Efficiency	97.5%	97.5%	97.5%	97.5%
Protection				
PV String Current Monitoring	Integrated	Integrated	Integrated	Integrated
PV Insulation Resistance Detection	Integrated	Integrated	Integrated	Integrated
Residual Current Monitoring	Integrated	Integrated	Integrated	Integrated
PV Reverse Polarity Protection	Integrated	Integrated	Integrated	Integrated
Battery Reverse Polarity Protection	Integrated	Integrated	Integrated	Integrated

Technical Data	GW12KL-ET	GW18KL-ET	GW20K-ET	GW30K-ET
Anti-islanding Protection	Integrated	Integrated	Integrated	Integrated
AC Overcurrent Protection	Integrated	Integrated	Integrated	Integrated
AC Short Circuit Protection	Integrated	Integrated	Integrated	Integrated
AC Overvoltage Protection	Integrated	Integrated	Integrated	Integrated
DC Switch	Integrated	Integrated	Integrated	Integrated
DC Surge Protection	Type II	Type II	Type II	Type II
AC Surge Protection	Type III	Type III	Type III	Type III
AFCI	Integrated	Integrated	Integrated	Integrated
Rapid Shutdown	Optional	Optional	Optional	Optional
Remote Shutdown	Integrated	Integrated	Integrated	Integrated
General Data				
Operating Temperature Range (℃)	-35~+60	-35~+60	-35~+60	-35~+60
Storage Temperature (℃)	-45~+85	-45~+85	-45~+85	-45~+85
Relative Humidity	0 ~ 95%	0 ~ 95%	0 ~ 95%	0 ~ 95%
Max. Operating Altitude (m)	4000	4000	4000	4000
Cooling Method	Smart Fan Cooling	Smart Fan Cooling	Smart Fan Cooling	Smart Fan Cooling
User Interface	LED, WLAN+APP	LED, WLAN+APP	LED, WLAN+APP	LED, WLAN+APP
Communication with BMS	RS485 / CAN	RS485 / CAN	RS485 / CAN	RS485 / CAN

Technical Data	GW12KL-ET	GW18KL-ET	GW20K-ET	GW30K-ET
Communication	RS485, WiFi+LAN+Bluetooth, 4G+Bluetooth(Optional)	RS485, WiFi+LAN+Bluetooth, 4G+Bluetooth(Optional)	RS485, WiFi+LAN+Bluetooth, 4G+Bluetooth(Optional)	RS485, WiFi+LAN+Bluetooth, 4G+Bluetooth(Optional)
Communication Protocols	Modbus-RTU (SunSpec Compliant), Modbus-TCP	Modbus-RTU (SunSpec Compliant), Modbus-TCP	Modbus-RTU (SunSpec Compliant), Modbus-TCP	Modbus-RTU (SunSpec Compliant), Modbus-TCP
Weight (kg)	48	54	48	54
Dimension W×H×D (mm)	520×660×220	520×660×220	520×660×220	520×660×220
Noise Emission (dB)	<45	<60	<45	<60
Topology	Non-isolated	Non-isolated	Non-isolated	Non-isolated
Self-consumption at Night (W) *4	<15	<15	<15	<15
Ingress Protection Rating	IP66	IP66	IP66	IP66
Anti-corrosion Class	C4	C4	C4	C4
DC Connector	MC4	MC4	MC4	MC4
AC Connector	OT	OT	OT	OT
Environmental Category	4K4H	4K4H	4K4H	4K4H
Pollution Degree	III	III	III	III
Overvoltage Category	DC II / AC III	DC II / AC III	DC II / AC III	DC II / AC III
Protective Class	I	I	I	I

Technical Data	GW12KL-ET	GW18KL-ET	GW20K-ET	GW30K-ET
The Decisive Voltage Class (DVC)	Battery：C PV：C AC：C Com：A	Battery：C PV：C AC：C Com：A	Battery：C PV：C AC：C Com：A	Battery：C PV：C AC：C Com：A
Mounting Method	Wall Mounted	Wall Mounted	Wall Mounted	Wall Mounted
Active Anti-islanding Method	FDPF + AQDPF *5	FDPF + AQDPF *5	AFDPF + AQDPF *5	AFDPF + AQDPF *5
Type of Electrical Supply System	Three phase Grid	Three phase Grid	Three phase Grid	Three phase Grid
Country of Manufacture	China	China	China	China

*1: For a 1000V system, the maximum operating voltage is 950V.
*2: Output Voltage Range: phase voltage.
*3: Can only be reached if PV and battery power are sufficient.
*4: No Backup Output.
*5: AFDPF: Active Frequency Drift with Positive Feedback, AQDPF: Active Q Drift with Positive Feedback.
*6: When the load is connected to the inverter's backup port, the Max. Apparent Power from Utility Grid can reach 18kVA for GW12KL-ET, 19.8kVA for GW18KL-ET, 30kVA for GW20K-ET, and 33kVA for GW30K-ET respectively.
*7: When the load is connected to the inverter's backup port, the Max. AC Current From Utility Grid can reach 47.2A for GW12KL-ET and 52A for GW18KL-ET; and can reach 45A for GW20K-ET and 50A for GW30K-ET respectively.
*8: Nominal Output Power at 40°C(W) and Max. Output Power at 40°C(W) are only for Brazil.

9.2 Battery Parameters

9.2.1 Lynx C Series 60kWh C&I Battery System

Technical Parameters	GW60KWH-D-10	GW60KWH-D-10(EXTENSION)
Battery Data		
Usable Energy (kWh)*1	60	
Cell Type	LFP (LiFePO4)	
Cell Capacity (Ah)	100	
Pack Nominal Energy (kWh)	5.76	
Number of Packs	11	
Nominal Voltage (V)	633.6	
Operating Voltage Range (V)	554.4~712.8	
Max. Charge/ Discharge Current (A)*2	96	
Max. Charge/ Discharge Rate*2	0.96C	
Cycle Life*3	≥5000	
Depth of Discharge	100%	
Efficiency		
Round-trip Efficiency	95%	
General Data		
Operating Temperature Range (℃)	Charge: 0~+55; Discharge: -25~+55	
Storage Temperature (℃)	0~+35(< One Year)；-20~0(≤One Month)；+35~+40(≤One Month)	
Relative Humidity	0~95%	
Max. Operating Altitude (m)	3000	
Heating & Cooling	Air Conditioner	
User Interface	LED indicator	
Communication Interface	CAN	
Communication Protocol	CAN	
Weight (kg)	appro.1029.5	appro.972
Dimension (W×H×D mm)	1108×2050× 1111.5	808×2050× 1111.5
Ingress Protection Rating	IP55(Battery Cabinet)	
Anti-Corrosion*4	C4 (Optional upgrade to C5)	
Fire Suppression	Perfluoro	
Certification*5		

Technical Parameters	GW60KWH-D-10	GW60KWH-D-10(EXTENSION)
Safety Regulation	IEC62619/63056, IEC60730-1, IEC/EN62477-1, IEC62040-1	
EMC	EN IEC61000-6-1, EN IEC61000-6-2, EN IEC61000-6-3, EN IEC61000-6-4	
*1: Test conditions, 100% DOD, 0.5C charge & discharge at +25±2 °C for battery system at beginning life. System Usable Energy may vary with different Inverter. *2: Actual Dis-/Charge Current and power derating will occur related to Cell Temperature and SOC.And, Max C-rate continuous time is affected by SOC, Cell Temperature, Atmosphere environment temperature ,Air-conditioner refrigeration capacity. *3: Based on Cell test condition of 25±2℃, 0.5C/0.5C and 80% EOL. *4: Excluding locks. *5: Not all certifications & standards listed, check the official website for detail.		

9.2.2 BAT-S Series 15.3-56.3kWh High Voltage Battery

Technical Data	GW15.3-BAT-I-G11	GW20.4-BAT-I-G11
Battery System		
Cell Type	LFP ($LiFePO_4$)	
Capacity (Ah)	100	
Pack Type/model	GW5.1-PACK-I-G10	
Pack Nominal Energy (kWh)	5.12	
Pack Configuration	1P48S	1P64S
Pack Weight (kg)	42.5	
Number of Packs	3	4
Nominal Energy (kWh)	15.3	20.4
Usable Energy (kWh) *1	15	20

Technical Data	GW15.3-BAT-I-G11	GW20.4-BAT-I-G11
Nominal Voltage (V)	153.6	204.8
Operating Voltage Range (V)	137.76~173.28	183.68~231.04
Charging Operating Temperature Range（℃）	0~+55	
Discharging Operating Temperature Range（℃）	-20~+55	
Max. Charge/ Disharge Current (A) *2	100/110	
Max. Charge/ Discharge Rate *2	1C/1.1C	
Max. Charge/ Discharge power (kW) *2	15.3/16.8	20.4/22.4
Cycle Life	6000 (25±2°C, 0.5C, 90%DOD, 70%EOL)	
Depth of Discharge	100%	
Efficiency		
Round-trip Efficiency	96%@100%DOD, 0.2C, 25±2℃	
General Data		
Operating Temperature Range (℃)	0~40℃	
Storage Temperature (℃)	+35~+45 (< 6 Months); -20~+35 (< 1 Year)	
Relative Humidity	5 ~ 85%, No condensation	
Max. Operating Altitude (m)	3000	
Cooling Method	Natural Cooling	
User Interface	LED	
Communication	CAN (RS485 Optional)	

Technical Data	GW15.3-BAT-I-G11	GW20.4-BAT-I-G11
Weight-stacked(kg)	158	203
Dimension-stacked (W×H×D mm)	481*649*552	481*787*552
Ingress Protection Rating	IP20	
Fire safety equipment	Aerosol, Pack Level	
Certification*3		
Safety Regulation	For details, please visit our official website	
EMC	For details, please visit our official website	

Note:

1. Test conditions, 100% DOD, 0.2C charge & discharge at +25±2 °C for battery system at beginning life. System Usable Energy may vary with system configuration.
2. Actual Dis-/Charge Current and power derating will occur related to Cell Temperature and SOC. And, Max C-rate continuous time is affected by SOC, Cell Temperature, Atmosphere environment temperature .
3. Not all certifications & standards listed, check the official website for detail.

Technical Data	GW25.6-BAT-I-G10	GW30.7-BAT-I-G10	GW35.8-BAT-I-G10	GW40.9-BAT-I-G10	GW46.0-BAT-I-G10	GW51.2-BAT-I-G10	GW56.3-BAT-I-G10
Battery System							
Cell Type	LFP ($LiFePO_4$)						
Capacity (Ah)	100						
Pack Type/model	GW5.1-PACK-I-G10						

Technical Data	GW25.6-BAT-I-G10	GW30.7-BAT-I-G10	GW35.8-BAT-I-G10	GW40.9-BAT-I-G10	GW46.0-BAT-I-G10	GW51.2-BAT-I-G10	GW56.3-BAT-I-G10
Pack Nominal Energy (kWh)	5.12						
Pack Configuration	1P80S	1P96S	1P112S	1P128S	1P144S	1P160S	1P176S
Pack Weight (kg)	42.5						
Number of Packs	5	6	7	8	9	10	11
Nominal Energy (kWh)	25.6	30.7	35.8	40.9	46	51.2	56.3
Usable Energy (kWh) *1	25	30	35	40	45	50	55
Nominal Voltage (V)	256	307.2	358.4	409.6	460.8	512	563.2
Operating Voltage Range (V)	229.6~288.8	275.52~346.56	321.44~404.32	367.36~462.08	413.28~519.84	459.2~577.6	505.12~635.36
Charging Operating Temperature Range (℃)	0~+55						

Technical Data	GW25.6-BAT-I-G10	GW30.7-BAT-I-G10	GW35.8-BAT-I-G10	GW40.9-BAT-I-G10	GW46.0-BAT-I-G10	GW51.2-BAT-I-G10	GW56.3-BAT-I-G10
Discharging Operating Temperature Range (℃)	-20~+55						
Max. Charge/Discharge Current (A) *2	100/110						
Max. Charge/Discharge Rate *2	1C/1.1C						
Max. Charge/Discharge Power (kW) *2	25.6/28.1	30.7/33.7	35.8/39.4	40.9/44.9	46.0/50.6	51.2/56.3	56.3/61.9
Cycle Life	6000 (25±2°C, 0.5C, 90% DOD, 70% EOL)						
Depth of Discharge	1						
Efficiency							
Round-trip Efficiency	96%@100%DOD, 0.2C, 25±2℃						
General Data							
Operating Temperature Range (℃)	0~40℃						

Technical Data	GW25.6-BAT-I-G10	GW30.7-BAT-I-G10	GW35.8-BAT-I-G10	GW40.9-BAT-I-G10	GW46.0-BAT-I-G10	GW51.2-BAT-I-G10	GW56.3-BAT-I-G10
Storage Temperature (℃)	+35°C to +45°C (<6 Months); -20°C to +35°C (<1 Year)						
Relative Humidity	5-85%, no condensation						
Max. Operating Altitude (m)	3000						
Cooling Method	Natural Cooling						
User Interface	LED						
Communication	CAN (RS485 Optional)						
Weight-rack mounted (kg)	-	-	-	-	-	495	540
Weight-stacked (kg)	248	293	338	383	428	472	517
Dimension-rack mounted (W×H×D mm)	-	-	-	-	-	543*1815*520	
Dimension-stacked (W×H×D mm)	481*925*552	481*1063*552	481*1201*552	481*1339*552	481*1477*552	481*1615*552	481*1753*552

Technical Data	GW25.6-BAT-I-G10	GW30.7-BAT-I-G10	GW35.8-BAT-I-G10	GW40.9-BAT-I-G10	GW46.0-BAT-I-G10	GW51.2-BAT-I-G10	GW56.3-BAT-I-G10
Ingress Protection Rating	IP20						
Fire safety equipment	Aerosol, Pack Level						
Certification *3							
Safety Regulation	For details, please visit our official website						
EMC	For details, please visit our official website						

Note:

1. Test conditions, 100% DOD, 0.2C charge & discharge at +25±2 °C for battery system at beginning life. System Usable Energy may vary with system configuration.
2. Actual Dis-/Charge Current and power derating will occur related to Cell Temperature and SOC. And, Max C-rate continuous time is affected by SOC, Cell Temperature, Atmosphere environment temperature .
3. Not all certifications & standards listed, check the official website for detail.

9.2.3 BAT-C Series 61.4-112.6kWh C&I Battery System

Technical Data	GW61.4-BAT-AC-G10	GW92.1-BAT-AC-G10	GW102.4-BAT-AC-G10	GW112.6-BAT-AC-G10
Battery System				
Cell Type	LFP ($LiFePO_4$)			
Cell Capacity (Ah)	100			

Technical Data	GW61.4-BAT-AC-G10	GW92.1-BAT-AC-G10	GW102.4-BAT-AC-G10	GW112.6-BAT-AC-G10
Rated Capacity (Ah)	200			
Pack Type/model	GW10.2-PACK-ACI-G10			
Pack Nominal Energy (kWh)	10.24			
Pack Configuration	2P96S	2P144S	2P160S	2P176S
Pack Weight（kg）	< 90			
Number of Packs	6	9	10	11
Nominal Energy (kWh)	61.4	92.1	102.4	112.6
Usable Energy (kWh) *1	60	90	100	110
Nominal Voltage (V)	307.2	460.8	512	563.2
Operating Voltage Range (V)	275.52~346.56	413.28~519.84	459.2~577.6	505.12~635.36
Charging Operating Temperature Range（℃）	-20~+55			
Discharging Operating Temperature Range（℃）	-20~+55			

Technical Data	GW61.4-BAT-AC-G10	GW92.1-BAT-AC-G10	GW102.4-BAT-AC-G10	GW112.6-BAT-AC-G10
Max. Charge/ Discharge Current (A) *2	180/220			
Rated Charge/ Discharge Current (A) *2	100/100			
Max. Charge/ Discharge Rate *2	0.9C/1.1C			
Max. Charge/ Discharge power (kW) *2	55.2/67.5	82.9/101.3	92.1/112.6	101.3/123.9
Rated Charge/ Discharge power (kW) *2	30.7	46.0	51.2	56.3
Cycle Life*3	≥6000 times until 70% SOH under 25±2°C.0.5C and 100% DOD			
Depth of Discharge	100%			
Efficiency				
Round-trip Efficiency*3	96%@100%DOD, 0.2C, 25±2℃			
General Data				
Operating Temperature Range (℃)	-20~+55			
Storage Temperature (℃)	+35~+45 (<6 Months); -20~+35 (<1)			
Relative Humidity	0 ~ 100%（Condensationless）			

Technical Data	GW61.4-BAT-AC-G10	GW92.1-BAT-AC-G10	GW102.4-BAT-AC-G10	GW112.6-BAT-AC-G10
Max. Operating Altitude (m)	4000			
Cooling Method	Air Conditioner			
User Interface	LED			
Communication	CAN (RS485 Optional)			
Weight (kg)	< 950	< 1220	< 1310	< 1400
Dimension (W×H×Dmm)	1055*2000*1055			
Noise Emission (dB)	≤70			
Ingress Protection Rating	IP55	IP55	IP55	IP55
Anti-corrosion Class	C4（C5-M Optional）			
Fire safety equipment*4	Aerosol (Pack&Cabinet Level)			
Certification *5				
Safety Regulation	IEC62619/IEC63056/IEC60730/IEC62477/VDE2510/ISO13849 IEC62040/N140/EU 2023/1542/UN38.3			
EMC	IEC/EN61000-6-1/2/3/4			

Technical Data	GW61.4-BAT-AC-G10	GW92.1-BAT-AC-G10	GW102.4-BAT-AC-G10	GW112.6-BAT-AC-G10

Note:

1. Test conditions, 100% DOD, 0.2C charge & discharge at +25±2 °C for battery system at beginning life. System Usable Energy may vary with system configuration.
2. Actual Dis-/Charge Current and power derating will occur related to Cell Temperature and SOC. And, Max C-rate continuous time is affected by SOC, Cell Temperature, Atmosphere environment temperature. Rated Charge/ Discharge Current & Rated Charge/ Discharge power only for Australia.
3. For Australian DOD is 98%.
4. Aerosol (Cabinet Level) before May 30th, Aerosol (Pack&Cabinet Level) after May 30th.
5. Not all certifications & standards listed, check the official website for detail.

9.3 Smart Meter Technical Data

9.3.1 GM330

technical parameter		GM330
Measurement Range	Supported Grid Type	Three-phase, split-phase, single-phase
	voltage Range L-L (Vac)	172~817
	voltage Range L-N (Vac)	100~472
	Nominal Frequency (Hz)	50/60
	CT ratio	nA:5A
Communication Parameters	Communication Method	RS485
	Communication Distance (m/ft)	1000/3280
Accuracy Parameters	voltage/current	Class 0.5
	Active Energy	Class 0.5
	Reactive Energy	Class 1

technical parameter		GM330
General Parameters	Dimensions(WxHxDmm/in)	72x85x72/2.83x3.35×2.83
	Housing	4-module
	Weight (g/Ib)	240/0.53
	Mounting Method	DIN rail
	User Interface	4 LEDs, Reset Button
	Power Consumption (W)	≤5
Environmental Parameters	IP Rating	IP20
	Operating Temperature Range (℃/°F)	-30~+70/-22~+158
	Storage Temperature Range(℃/°F)	-30~70/-22~+158
	Relative Humidity (non-condensing)	0~95%
	Max. Operating Altitude (m/ft)	3000/9842
Certification Parameters	Certification	UL1741/ANSI

9.3.2 GM3000

Technical Parameter		GM3000
Application		Three-phase
Voltage	Nominal Voltage	3L+N/400V
	Voltage Range	100V~240V
	Frequency	50Hz/60Hz
Current	Rated Current	CT in: 120A/40mA;
	Current Range	0.48A~120A
Power Consumption		<3W
Data Detection		Voltage/Current/Active Power/Reactive Power/Power Factor/Frequency
Energy Calculation		Active/Reactive Power
Accuracy	Voltage/Current	Class I

	Active	Class I
	Reactive	Class II
Communication		RS485 (Max. Speed 9600/ModBus Protocol/Max. Cable Length 100m)
Display		LED, USB, Reset Button
Device	Dimensions (L x W x H mm)	36 x 85 x 66.5
	Weight (g)	450
	Ingress Protection Rating	IP20(Indoor)
	Mounting Method	Back Plate Mounting
Operating Temperature		-25 ~ +60° C
Storage Temperature		-25 ~ +60° C
Humidity		<95% Non-condensing
Operating Altitude(m)		< 2000m
Safe Service Life (Years)		≥25

9.3.3 GMK330

model	**GMK330**
Measurement Range	
Supported Grid Type	1P2W/3P3W/3P4W
Operating voltage (Vac)*	3P4W: 90~264 L-N 3P3W: 90~264 L-L
Frequency (Hz)	50/60
CT ratio	120A: 40mA 200A: 50mA*
Number of CTs	3
Accuracy Parameters	
voltage/current	Class 0.5
Active Energy	Class 0.5

model	GMK330
Reactive Energy	Class 1
Communication Parameters	
Communication Method	RS485
Communication Distance (m)	1000
General Parameters	
Dimensions (W*H*D mm)	72*85*72
Housing	4模
Weight (g)	240
Mounting Method	DIN Rail
User Interface	4 LEDs, Reset Button
Power Consumption (W)	＜5
Environmental Parameters	
IP Rating	IP20
Operating Temperature Range (℃)	-30-+70
Storage Temperature Range (℃)	-30-+70
Relative Humidity (non-condensing)	0-95%
Max. Operating Altitude (m)	3000

*Supports 1.1 times rated voltage input.
*The standard CT for the meter has been uniformly updated to the 120A:40mA specification. Meters equipped with the 200A:50mA CT will no longer be sold after June 2026.

9.4 Smart Dongle Technical Data

9.4.1 4G Kit-CN-G21

Product Model	4G Kit-CN-G21
Device Management	
Max. Supported Inverter Quantity	1
Electrical Specifications	
Input Voltage (V)	5
Power Consumption (W)	≤4
Interface Type	USB
Communication Specifications	
4G/3G/2G	LTE-FDD：B1/B3/B5/B8 LTE-TDD：B34/B39/B40/B41
GNSS Positioning	BeiDou, GPS
Bluetooth	Bluetooth V5.0
Mechanical Specifications	
Dimensions (W×H×D mm)	48.3*95.5*32.1
Weight (g)	87
indicator	LED* 2
Mounting Method	Plug and Play
SIM Card Size	Micro sim, 15mm*12mm
Environmental Specifications	
Operating Temperature Range (℃)	-30~+65
Storage Temperature Range (℃)	-40~+70
Relative Humidity	0-100%
IP Rating	IP66
Max. Operating Altitude (m)	4000

Product Model	4G Kit-CN-G21
Compliance Standards	
Certification	SRRC、CTA

9.4.2 4G Kit-CN-G20

Product Model	4G Kit-CN-G20
Device Management	
Max. Supported Inverter Quantity	1
Power Parameters	
Input Voltage (V)	5
Power Consumption (W)	≤4
Interface Method	USB
Communication Parameters	
4G/3G/2G	LTE-FDD：B1/B3/B5/B8 LTE-TDD：B34/B39/B40/B41
GNSS Positioning	/
Bluetooth	Bluetooth V5.0
Mechanical Parameters	
Dimensions (Width×Height×Thickness mm)	48.3*95.5*32.1
Weight (g)	87
indicator	LED* 2
Mounting Method	Plug and Play
SIM Card Size	Micro sim, 15mm*12mm
Environmental Parameters	
Operating Temperature Range (℃)	-30~+65
Storage Temperature Range (℃)	-40~+70
Relative Humidity	0-100%

Product Model	4G Kit-CN-G20
IP Rating	IP66
Max. Operating Altitude (m)	4000
Compliant Standards	
Certification	SRRC, CTA

9.4.3 WiFi/LAN Kit-20

technical parameter		WiFi/LAN Kit-20
Output Voltage (V)		5
Power Consumption (W)		≤2
Communication Interface		USB
Communication Parameters	Ethernet	10M/100Mbps Auto-negotiation
	Wireless	IEEE 802.11 b/g/n @2.4 GHz
	Bluetooth	Bluetooth V4.2 BR/EDR and Bluetooth LE Standard
Mechanical Parameters	Dimensions (W×H×D mm)	48.3*159.5*32.1
	Weight (g)	82
	Ingress Protection Rating	IP65
	Mounting Method	USB Port Plug/Unplug
Operating Temperature Range (℃)		-30~+60
Storage Temperature Range (℃)		-40~+70
Relative Humidity		0-95%
Max. Operating Altitude (m)		4000

9.4.4 Ezlink3000

Indicator /Silkscreen	Color	Status	Description
	Blue		Flashing = The communication stick is operating normally.

Indicator /Silkscreen	Color	Status	Description
Power Light			Off = The communication stick is powered off.
Communication Light	Green		Steady on = The communication stick is connected to the server.
			Double flash = The communication stick is not connected to the router.
			Quadruple flash = The communication stick is connected to the router but not connected to the server.
RELOAD	-	-	• Press and hold for 1-3 seconds to restart the communication stick. • Press and hold for 6-10 seconds to restore factory settings. Double-click quickly to enable Bluetooth signal (only maintained for 5 minutes).

10 Appendix

10.1 FAQ

10.1.1 How to conduct auxiliary detection for smart meters/CT?

The meter detection function can check whether the meter CT is connected correctly and the current operating status of the meter and CT.

- Method 1:

1. Go to **[Home]** > **[Settings]** > **[Meter/CT Auxiliary Detection]** to access the detection page.
2. Click Start Detection, wait for the detection to complete, and then view the results.

- Method 2:

1. Click ⚙ > **[System Setup]** > **[Quick Setting]** > **[Meter/CT Assisted Test]** to access the detection page.
2. Click Start Detection, wait for the detection to complete, and then view the results.

10.1.2 How to Upgrade the Device Version

Through the firmware information, you can view or upgrade:
The inverter's DSP version, ARM version, communication module software version, battery's BMS version, DCDC version, etc.

- **Prompted Upgrade:**

When the user opens the App, an upgrade prompt pops up on the home page. The user can choose whether to upgrade. If they choose to upgrade, they can complete the upgrade by following the on-screen instructions.

- **Regular Upgrade:**

Go to **[Home]** > **[Settings]** > **[Firmware Information]** to enter the firmware information viewing interface.
Click "Check for Updates". If a new version is available, complete the upgrade by

following the on-screen instructions.

- **Forced Upgrade:**

The App pushes an upgrade notification. The user must upgrade as prompted; otherwise, the App cannot be used. Complete the upgrade by following the on-screen instructions.

Inverter Software Version Upgrade

- The inverter supports software upgrade via a USB drive.
- Before using a USB drive to upgrade the device, please contact the after-sales service center to obtain the software upgrade package and upgrade method.

10.2 Abbreviations

Abbreviation	English Description	Chinese Description
Ubatt	Battery Voltage Range	Battery voltage range
Ubatt,r	Nominal Battery Voltage	Nominal battery voltage
Ibatt,max (C/D)	Max. Charging Current Max. Discharging Current	Max. Charging/Discharging Current
EC,R	Rated Energy	Rated Energy
UDCmax	Max.Input Voltage	Max. Input Voltage
UMPP	MPPT Operating Voltage Range	MPPT Voltage Range
IDC,max	Max. Input Current per MPPT	Max. Input Current per MPPT
ISC PV	Max. Short Circuit Current per MPPT	Max. Short Circuit Current per MPPT
PAC,r	Nominal Output Power	Nominal output power
Sr (to grid)	Nominal Apparent Power Output to Utility Grid	Nominal Apparent Power Output to Utility Grid
Smax (to grid)	Max. Apparent Power Output to Utility Grid	Max. Apparent Power Output to Utility Grid
Sr (from grid)	Nominal Apparent Power from Utility Grid	Nominal Apparent Power from Utility Grid
Smax (from grid)	Max. Apparent Power from Utility Grid	Max. Apparent Power from Utility Grid
UAC,r	Nominal Output Voltage	Nominal output voltage

Abbreviation	English Description	Chinese Description
fAC,r	Nominal AC Grid Frequency	Nominal AC Grid Frequency
IAC,max(to grid)	Max. AC Current Output to Utility Grid	Max. AC Current Output to Utility Grid
IAC,max(from grid)	Max. AC Current From Utility Grid	Max. Current from Grid
P.F.	Power Factor	Power Factor
Sr	Back-up Nominal apparent power	Off-grid Nominal Apparent Power
Smax	Max. Output Apparent Power (VA) Max. Output Apparent Power without Grid	Max. Apparent Power to Grid
IAC,max	Max. Output Current	Max. Current to Grid
UAC,r	Nominal Output Voltage	Max. Output Voltage
fAC,r	Nominal Output Freqency	Nominal Output Voltage Frequency
Toperating	Operating Temperature Range	Operating Temperature Range
IDC,max	Max. Input Current	Max. Input Current
UDC	Input Voltage	Input Voltage
UDC,r	DC Power Supply	DC Input
UAC	Power Supply/AC Power Supply	Input Voltage Range/AC Input
UAC,r	Power Supply/Input Voltage Range	Input Voltage Range/AC Input
Toperating	Operating Temperature Range	Operating Temperature Range
Pmax	Max Output Power	Maximum Power
PRF	TX Power	Transmit Power
PD	Power Consumption	Power Consumption
PAC,r	Power Consumption	Power Consumption
F (Hz)	Frequency	Frequency
ISC PV	Max. Input Short Circuit Current	Max. Input Short Circuit Current
Udcmin-Udcmax	Range of input Operating Voltage	Operating Voltage range
UAC,rang(L-N)	Power Supply Input Voltage	Adapter Input Voltage Range

Abbreviation	English Description	Chinese Description
Usys,max	Max System Voltage	Max. System Voltage
Haltitude,max	Max. Operating Altitude	Max. Operating Altitude
PF	Power Factor	Power Factor
THDi	Total Harmonic Distortion of Current	Current Harmonic Distortion
THDv	Total Harmonic Distortion of Voltage	Voltage Harmonic Distortion
C&I	Commercial & Industrial	Commercial & Industrial
SEMS	Smart Energy Management System	Smart Energy Management System
MPPT	Maximum Power Point Tracking	Maximum Power Point Tracking
PID	Potential-Induced Degradation	Potential-Induced Degradation
Voc	Open-Circuit Voltage	open-circuit voltage
Anti PID	Anti-PID	Anti-PID
PID Recovery	PID Recovery	PID Recovery
PLC	Power-line Commucation	Power Line Carrier Communication
Modbus TCP/IP	Modbus Transmission Control / Internet Protocol	Modbus over TCP/IP
Modbus RTU	Modbus Remote Terminal Unit	Modbus over Serial Link
SCR	Short-Circuit Ratio	Short-Circuit Ratio
UPS	Uninterruptable Power Supply	Uninterruptible Power Supply
ECO mode	Economical Mode	Economic Mode
TOU	Time of Use	Time of Use
ESS	Energy Stroage System	energy storage system
PCS	Power Conversion System	Power Conversion System
RSD	Rapid shutdown	Rapid Shutdown
EPO	Emergency Power Off	Emergency Poweroff
SPD	Surge Protection Device	Surge Protection
ARC	zero injection/zero export Power Limit / Export Power Limit	Power Limit
DRED	Demand Response Enabling Device	Demand Response Enabling Device

Abbreviation	English Description	Chinese Description
RCR	Ripple Control Receiver	-
AFCI	AFCI	AFCI DC Arc Fault Protection
GFCI	Ground Fault Circuit Interrupter	GFCI
RCMU	Residual Current Monitioring Unit	Residual Current Monitoring Unit
FRT	Fault Ride Through	Fault Ride Through
HVRT	High Voltage Ride Through	High Voltage Ride Through
LVRT	Low Voltage Ride Through	Low Voltage Ride Through
EMS	Energy Management System	Energy Management System
BMS	Battery Management System	Battery Management System
BMU	Battery Measure Unit	Battery Measurement Unit
BCU	Battery Control Unit	Battery Control Unit
SOC	State of Charge	State of Charge
SOH	State of Health	State of Health
SOE	State Of Energy	State Of Energy
SOP	State Of Power	State Of Power
SOF	State Of Function	State Of Function
SOS	State Of Safety	State Of Safety
DOD	Depth of discharge	depth of discharge

10.3 Explanation of Terms

- **Explanation of Overvoltage Categories**
  - **Overvoltage Category I**: Equipment connected to circuits with measures to limit transient overvoltages to a relatively low level.
  - **Overvoltage Category II**: Energy-consuming equipment supplied by fixed distribution installations. This category includes appliances, portable tools, and other household and similar loads. If special requirements for reliability and suitability are imposed on such equipment, Overvoltage Category III is adopted.
  - **Overvoltage Category III**: Equipment in fixed distribution installations where reliability and suitability must meet special requirements. This includes switching devices in fixed distribution installations and industrial equipment permanently connected to fixed distribution installations.
  - **Overvoltage Category IV**: Equipment used in the power supply of distribution installations, including measuring instruments and pre-overcurrent protection devices, etc.

- **Explanation of Damp Location Categories**

Environmental Parameter	Level		
	3K3	4K2	4K4H
Temperature Range	0~+40℃	-33~+40℃	-33~+40℃
Humidity Range	5% to 85%	15% to 100%	4% to 100%

- **Explanation of Environmental Categories:**
  - **Outdoor Inverter**: Ambient air temperature range from -25 to +60°C, suitable for environments with Pollution Degree 3;
  - **Indoor Type II Inverter**: Ambient air temperature range from -25 to +40°C, suitable for environments with Pollution Degree 3;
  - **Indoor Type I Inverter**: Ambient air temperature range from 0 to +40°C, suitable for environments with Pollution Degree 2;
- **Explanation of Pollution Degree Categories**
  - **Pollution Degree 1**: No pollution or only dry, non-conductive pollution;
  - **Pollution Degree 2**: Generally only non-conductive pollution, but occasional temporary conductive pollution due to condensation must be considered;
  - **Pollution Degree 3**: Conductive pollution exists, or non-conductive pollution becomes conductive due to condensation;
  - **Pollution Degree 4**: Persistent conductive pollution, such as pollution caused by conductive dust or rain/snow.

10.4 Meaning of Battery SN Code

Digits 11-14 of the product SN code represent the production date code.
The production date in the image above is 2023-08-08.

- Digits 11 and 12 represent the last two digits of the production year, e.g., 2023 is represented as 23;
- Digit 13 represents the production month, e.g., August is represented as 8; Details are as follows:

Month	Jan-Sep	Oct	Nov	Dec
Month Code	1~9	A	B	C

- Digit 14 represents the production day, e.g., the 8th is represented as 8; Numbers are used preferentially, e.g., 1~9 represent the 1st~9th day, A represents the 10th day, and so on. The letters I and O are not used to avoid confusion. Details are as follows:

Production Day	1	2	3	4	5	6	7	8	9
Code	1	2	3	4	5	6	7	8	9

Production Date	10	11	12	13	14	15	16	17	18
Code	A	B	C	D	E	F	G	H	J

Production Date	21	22	23	24	25	26	27	28	29
Code	M	N	P	Q	R	S	T	U	V

10.5 Safety Compliance Countries

No.	Safety Regulation Name	No.	Safety Regulation Name
Europe			
1	IT-CEI 0-21	56	IE-LV-72A
2	IT-CEI 0-16	57	IE-ESB-C&D(< 110kV)
3	DE LV with PV	58	IE-EirGrid-110kV
4	DE LV without PV	59	PT-D
5	DE-MV	60	EE

No.	Safety Regulation Name	No.	Safety Regulation Name
6	ES-A	61	NO
7	ES-B	62	FI-A
8	ES-C	63	FI-B
9	ES-D	64	FI-C
10	ES-island	65	FI-D
11	BE	66	UA-A1
12	FR-LV	67	UA-A2
13	FR-island-50Hz	68	EN 50549-1
14	FR-island-60Hz	69	EN 50549-2
15	type A-PL_V.1.1	70	DK-West-B-MVHV
16	type B-LV-PL_V.1.1	71	DK-East-B-MVHV
17	type C-PL_V.1.1	72	DK-West-C-MVHV
18	type D-PL_V.1.1	73	DK-East-C-MVHV
19	NL-16/20A	74	DK-West-D-MVHV
20	NL-A	75	DK-East-D-MVHV
21	NL-B	76	FR-Reunion
22	NL-C	77	BE-LV（>30kVA）
23	NL-D	78	BE-HV
24	SE-A	79	CH-B
25	SE MV	80	NI-G99-A
26	SK-A	81	NI-G99-B
27	SK-B	82	NI-G99-C
28	SK-C	83	NI-G99-D

No.	Safety Regulation Name	No.	Safety Regulation Name
29	HU	84	IE-LV-170kVA
30	CH-A	85	IE-MV&HV-200kVA
31	CY	86	DE-HV
32	GR	87	FR-MV
33	DK-West-A	88	CZ-A1/A2-09
34	DK-East-A	89	DE-EHV
35	DK-West-B	90	IE-EirGrid-400KV
36	DK-East-B	91	IE-EirGrid-220KV
37	AT < 1kV	92	IE-EirGrid-66KV
38	AT > 1kV	93	IE-ESB-B
39	BG	94	IE-ESB-D(≥110kV)
40	Czech	95	type B-MV-PL_V.1.1
41	CZ-A1-09	96	GB-G99-A HV
42	CZ-A2-09	97	GB-G99-B LV
43	CZ-B1/B2-09	98	GB-G99-C LV
44	CZ-C	99	UA-B
45	CZ-D	100	UA-C
46	RO-A	101	UA-D
47	RO-B	102	UK-G98
48	RO-D	103	UK-G99-A LV
49	GB-G98	104	UK-G99-B LV
50	GB-G99-A LV	105	UK-G99-C LV
51	GB-G99-B HV	106	CZ-A1

No.	Safety Regulation Name	No.	Safety Regulation Name
52	GB-G99-C HV	107	UK-A-MV
53	GB-G99-D	108	UK-B-MV
54	NI-G98	109	UK-C-MV
55	IE-LV-16/25A	-	-
Global			
1	60Hz-Default	6	IEC 61727-60Hz
2	50Hz-Default	7	Warehouse
3	127Vac-60Hz-Default	8	IEC61727-480Vac-60Hz
4	127Vac-50Hz-Default	9	IEC61727-480Vac-50Hz
5	IEC 61727-50Hz		
Americas			
1	Argentina-220V-LV	38	LUMAPR-2024-220Vac-3P
2	US-208Vac	39	LUMAPR-2024-240Vac-3P
3	US-240Vac	40	Cayman
4	Mexico-220Vac	41	Brazil-220Vac
5	Mexico-440Vac	42	Brazil-208Vac
6	US-480Vac	43	Brazil-230Vac
7	US-208Vac-3P	44	Brazil-240Vac
8	US-220Vac-3P	45	Brazil-254Vac
9	US-240Vac-3P	46	Brazil-127Vac
10	US-CA-208Vac	47	Brazil-ONS
11	US-CA-240Vac	48	Barbados
12	US-CA-480Vac	49	Chile-BT
13	US-CA-208Vac-3P	50	Chile-MT-A

No.	Safety Regulation Name	No.	Safety Regulation Name
14	US-CA-220Vac-3P	51	Chile MT-B
15	US-CA-240Vac-3P	52	Colombia
16	US-HI-208Vac	53	Colombia<0.25MW-208Vac-1P
17	US-HI-240Vac	54	Colombia<0.25MW-120Vac-3P
18	US-HI-480Vac	55	IEEE 1547-208Vac
19	US-HI-208Vac-3P	56	IEEE 1547-220Vac
20	US-HI-220Vac-3P	57	IEEE 1547-240Vac
21	US-HI-240Vac-3P	58	IEEE 1547-230Vac
22	US-Kauai-208Vac	59	Colombia<0.25MW-127Vac-3P
23	US-Kauai-240Vac	60	Colombia>5MW
24	US-Kauai-480Vac	61	Mexico-127V
25	US-Kauai-208Vac-3P	62	Mexico-240V
26	US-Kauai-220Vac-3P	63	US-O&R-208Vac
27	US-Kauai-240Vac-3P	64	US-O&R-240Vac
28	US-ISO-NE-208Vac	65	US-O&R-480Vac
29	US-ISO-NE-240Vac	66	US-O&R-208Vac-3P
30	US-ISO-NE-480Vac	67	US-O&R-220Vac-3P
31	US-ISO-NE-208Vac-3P	68	US-O&R-240Vac-3P
32	US-ISO-NE-220Vac-3P	69	Brazil-277Vac
33	US-ISO-NE-240Vac-3P	70	Chile-BT ≤9MW
34	LUMAPR-2024-208Vac	71	Chile-MT ≤9MW
35	LUMAPR-2024-240Vac	72	Chile > 9MW
36	LUMAPR-2024-480Vac	73	Mexico-277Vac

No.	Safety Regulation Name	No.	Safety Regulation Name
37	LUMAPR-2024-208Vac-3P		
Oceania			
1	Australia-A	4	Newzealand
2	Australia-B	5	Newzealand:2015
3	Australia-C	6	NZ-GreenGrid
Asia			
1	China A	33	Israel-MV
2	China B	34	Israel-HV
3	China Higher Voltage	35	Vietnam
4	China Highest Voltage	36	Malaysia-LV
5	China Power Station	37	Malaysia-MV
6	China Shandong	38	DEWA-LV
7	China Hebei	39	DEWA-MV
8	China PCS	40	Saudi Arabia-220V-LV
9	Taiwan	41	JP-690Vac-50Hz
10	Hong Kong	42	JP-690Vac-60Hz
11	China Northeast	43	Srilanka-MV/HV
12	Thailand-MEA	44	IEC 61727-127Vac-50Hz
13	Thailand-PEA	45	IEC 61727-127Vac-60Hz
14	Mauritius	46	JP-550Vac-50Hz
15	Korea	47	JP-550Vac-60Hz
16	India	48	India-Higher
17	India-CEA	49	JP-220Vac-50Hz
18	Pakistan	50	JP-220Vac-60Hz

No.	Safety Regulation Name	No.	Safety Regulation Name
19	Philippines	51	Saudi Arabia-127V-LV
20	Philippines-127Vac	52	Srilanka-LV >1MW
21	JP-200Vac-50Hz	53	China-YN
22	JP-200Vac-60Hz	54	GB/T 29319-LV
23	JP-440Vac-50Hz	55	GB/T 29319-MV
24	JP-440Vac-60Hz	56	Philippines-277Vac
25	JP-420Vac-50Hz	57	JP-360Vac-50Hz
26	JP-420Vac-60Hz	58	JP-360Vac-60Hz
27	JP-480Vac-50Hz	59	JP-320Vac-50Hz
28	JP-480Vac-60Hz	60	JP-320Vac-60Hz
29	Srilanka-LV<1MW	61	JP-340Vac-50Hz
30	Singapore	62	JP-340Vac-60Hz
31	Israel-OG	63	JP-380Vac-50Hz
32	Israel-LV	64	JP-380Vac-60Hz
Africa			
1	Mauritius	5	Ghana-LV
2	South Africa-LV	6	Ghana-HV
3	South Africa-B-MV	7	South Africa-A3-LV
4	South Africa-C-MV	8	Nigeria

11 Contact Details

GoodWe Technologies Co., Ltd.
No. 90 Zijin Rd., New District, Suzhou, China
en.goodwe.com
service@goodwe.com