# Inverter matching list

## Revision History

| Version | Revision Date | Revision Description |
|---|---|---|
| 1.0 | 2025.3 | Added a new model compatible with our machines |
| 2.0 | 2025.4 | Added three new brands compatible with our machines |
| 3.0 | 2025.9 | Distinguish between official cooperative testing and our own testing |

# We Felicity hereby authorize

# Low voltage battery packs are compatible with the following brands of inverters

| CAN/RS485 Matched Hybrid Inverter Brands | | | |
|---|---|---|---|
| Brand | Model | Communication protocol | Cable Supply |
| Felicitysolar/ FilicityESS | IVEM series<br>IVGM5048/T-REX-5KLP1G01<br>IVGM10048/T-REX-10KLP3G01<br>IVPS/IVPM/IVPA series<br>IVGM8KLP1/P2G1<br>IVGM20KLP3G1 | RS485 | RJ45 |
| Deye | SUN- 3 / 3.6 / 5 / 6 K-SG04LP1- EU.<br>SUN- 3.6 / 5 / 6 K-SG03LP1-EU.<br>SUN- 3.6 / 5 / 6 / 7.6 / 8 K SG05LP1-EU.<br>SUN- 5 / 6 K-SG01LP1-US.<br>SUN- 7.6 / 8 K-SG01LP1-US/EU.<br>SUN- 5 / 6 / 8 / 10 / 12 K SG04LP3-EU.<br>SUN-12 / 14 / 16 K-SG01LP1-EU.<br>SUN-3/4/5/6/8/10/12K-SG05LP3-EU-SM2<br>SUN-14/15/16/18/20K-SG05LP3-EU-SM2 | RS485/CAN | RJ45 |
| Luxpower | LXP 3.6K/4.6K/5K Hybrid<br>LXP 3600 ACS series.<br>LXP-LB-EU 6-8K<br>LXP-LB-EU 8-10K<br>LXP-LB-EU 12K | RS485/CAN | RJ45 |
| Growatt | SPF 3500 -5000 ES<br>SPF 6000 ES Plus | RS485/CAN | RJ45 |

| | | | |
|---|---|---|---|
| Voltronic | Infini Solar V IV TWIN 6/6.5/ 8kw<br>Axpert VM III<br>Axpert VM IV<br>Axpert MKS III<br>Axpert MKS IV<br>Axpert MAX<br>Axpert MAX II | RS485 | RJ45 |
| Sunsynk | SUNSYNK-3.6/5/8K-SG01LP1<br>SYNK-8/10/12K-SG04LP3<br>SUNSYNK MAX | RS485/CAN | RJ45 |
| Megarevo (official) | R(5-8)KLNA<br>R(6-15)KH3<br>R(3-6)KL1 | CAN/RS485 | RJ45 |
| Victron | To ensure successful communication, please use this Cerbo GX box to communicate with our battery.<br> | CAN | RJ45 |
| SRNE (official) | HF4830S60-H/HF4850S80-H<br>HF4835U60-H/HF4850U80-H<br>HF4850S80 -145<br>HF4830U60 -145/HF4835U80 -145<br>HES48(80-120)S200-H<br>HES48(80-120)U200-H<br>HES48(40-60)S200-H | RS485 | RJ45 |
| Solis (official) | S6-EH1P(3-6)K-L-EU<br>S6-EH1P8K-L-PRO<br>S5-EH1P(3-6)K-L<br>S6-EH3P(8-15)K02-NV-YD-L | CAN | RJ45 |

| | | | |
|---|---|---|---|
| MPPsolar | PIP-MT series<br>U-GK/U-MS series<br>PIP-MKX series<br>PIP-MAX series<br>PIP-MGX series<br>PIP-MK series<br>PIP-GK series | RS485 | RJ45 |
| Afore | AF(1-3.6)K-SL<br>AF(3-6)K-SL | CAN | RJ45 |
| SOFAR | HYD 3000-6000-EP | CAN | RJ45 |
| CHISAGE ESS (official) | MARS-5-14G2-LE<br>MARS-5-14G1-LE<br>JUP-5-10G2-LE | CAN | RJ45 |
| SolaX Power (official) | X1-HYB-LV (3-6kw)<br>X1-LITE-LV (8-12kw)<br>X1-RENO-LV(8kW)<br>X3-NEO-LV (5-20kw)<br>OG (5kw/6kw) | CAN | RJ45 |
| Sol-Ark | Sol-Ark 15K-2P-N<br>Sol-Ark 12K / 8K / 5K (Outdoor)<br>Sol-Ark 12K / 8K Legacy (Indoor) | CAN | RJ45 |
| Hoymiles (official) | HYS-7.6LV-USG1<br>HYS-9.6LV-USG1<br>HYS-11.5LV-USG1 | CAN | RJ45 |
| INVT (official) | iMars XD3-6KTL | CAN | RJ45 |
| AOHAI (official) | AH-3-6KSL-G2 | CAN | RJ45 |
| Amensolar | N3H-X5 / 8 /10-US | CAN | RJ45 |

| | | | |
|---|---|---|---|
| SAJ | SAJ H1 3-6KW S2 | CAN | RJ45 |
| Solplanet | ASW H-S2 Series | CAN | RJ45 |
| GOODWE | GW5048D-ES<br>GW5000-SBP<br>GW3600-SBP | CAN | RJ45 |
| Shinemann | M5000H-48BP | CAN | RJ45 |
| Sungrow (official) | MG-5/6/8/10-RL Series | CAN | RJ45 |

Felicitysolar® Make life full of hope

*The following Felicity low-voltage battery packs are compatible with the above-mentioned inverter brands for communication:

1. LPBA Series (BMS V5 Version)
2. LPBF Series (BMS V5 Version)
3. FLA Series
4. LUX Series (Low-Voltage Battery Pack)
5. FLS Series
6. FLB Series

**Note:** Our battery is using **PYLON protocol**, in theory, our battery can communicate with inverters that support the PYLON protocol. For additional support, please contact our customer service staff.

Whatsapp:

E-mail: technicalsupport@felicitysolar.com

The corresponding communication pins are defined in the following table. You can make communication cables according to this table.

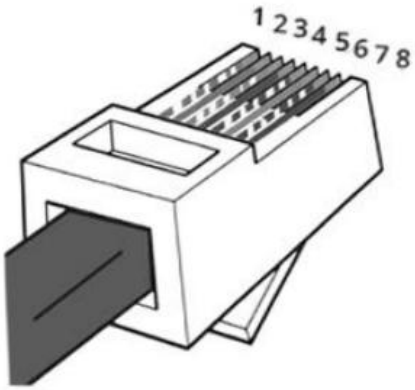


## (1)RS485 Protocol pins defined.

| | NO. | Felicitysolar | Deye | LuxPower | Growatt | Voltronic | MegaRevo | SRNE | Mppsolar | Sunsynk |
|---|---|---|---|---|---|---|---|---|---|---|
| RS485 | Pin1 | GND | RS485B | RS485B | RS485B | × | × | × | × | RS485-B |
| | Pin2 | × | RS485A | RS485A | RS485A | × | × | GND | × | RS485-A |
| | Pin3 | × | GND | × | × | RS485B | × | × | × | × |
| | Pin4 | × | × | × | × | × | × | × | RS485-A | × |
| | Pin5 | RS485B | × | × | × | RS485A | × | × | RS485-B | × |
| | Pin6 | RS485A | GND | × | × | × | × | × | × | × |
| | Pin7 | × | × | × | × | × | RS485A | RS485A | × | × |
| | Pin8 | × | × | GND | × | GND | RS485B | RS485B | GND | × |

## (2)CAN Protocol pins defined.

| | NO. | Felicitysolar | Victron | Solis | Deye | MegaRevo | Growatt | Afore | SOFAR | Luxpower | Sol-Ark | Hoymiles |
|---|---|---|---|---|---|---|---|---|---|---|---|---|
| CAN | Pin1 | × | × | × | × | × | × | × | CAN_H | × | × | × |
| | Pin2 | × | × | × | × | × | × | × | CAN_L | × | × | × |
| | Pin3 | CAN_L | × | × | × | × | × | × | × | × | × | × |
| | Pin4 | CAN_H | × | CAN_H | CAN_H | CAN_H | CAN_H | CAN_H | × | CAN_H | CAN_H | CAN_H |
| | Pin5 | × | × | CAN_L | CAN_L | CAN_L | CAN_L | CAN_L | × | CAN_L | CAN_L | CAN_L |
| | Pin6 | × | × | × | × | × | × | × | × | × | × | × |
| | Pin7 | CAN_L ( LUX-E-48100LG04 ) | CAN_H | × | × | × | × | × | × | × | × | × |
| | Pin8 | CAN_H ( LUX-E-48100LG04 ) | CAN_L | × | × | × | × | × | × | × | × | × |

**(3)For example, if you want to let our LPBA48100-OL battery to communicate with Victron inverter directly, you need to make a communication cable like the one below.**
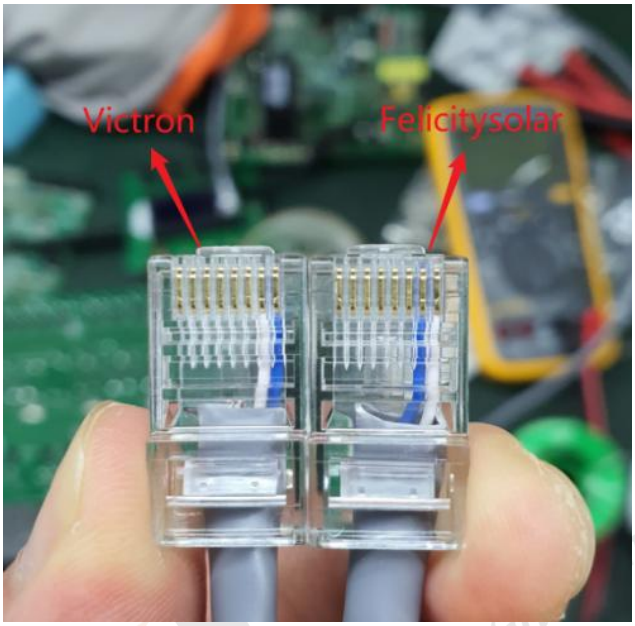
| | NO. | Felicitysolar | Victron |
|---|---|---|---|
| CAN | Pin1 | × | × |
| | Pin2 | × | × |
| | Pin3 | × | × |
| | Pin4 | × | × |
| | Pin5 | × | × |
| | Pin6 | × | × |
| | Pin7 | CAN_L | CAN_H |
| | Pin8 | CAN_H | CAN_L |