Inverter matching list

Revision History

Version	Revision Date	Revision Description
1.0	2025.3	Added a new model compatible with our machines
2.0	2025.4	Added three new brands compatible with our machines
3.0	2025.9	Distinguish between official cooperative testing and our own testing

We Felicity hereby authorize

Low voltage battery packs are compatible with the following brands of inverters

CAN/RS485 Matched Hybrid Inverter Brands			
Brand	Model	Communication protocol	Cable Supply
Felicitysolar/ FilicityESS	IVEM series IVGM5048/T-REX-5KLP1G01 IVGM10048/T-REX-10KLP3G01 IVPS/IVPM/IVPA series IVGM8KLP1/P2G1 IVGM20KLP3G1	RS485	RJ45
Deye	SUN- 3 / 3.6 / 5 / 6 K-SG04LP1- EU. SUN- 3.6 / 5 / 6 K-SG03LP1-EU. SUN- 3.6 / 5 / 6 / 7.6 / 8 K SG05LP1-EU. SUN- 5 / 6 K-SG01LP1-US. SUN- 7.6 / 8 K-SG01LP1-US/EU. SUN- 5 / 6 / 8 / 10 / 12 K SG04LP3-EU. SUN-12 / 14 / 16 K-SG01LP1-EU. SUN-3/4/5/6/8/10/12K-SG05LP3-EU-SM2 SUN-14/15/16/18/20K-SG05LP3-EU-SM2	RS485/CAN	RJ45
Luxpower	LXP 3.6K/4.6K/5K Hybrid LXP 3600 ACS series. LXP-LB-EU 6-8K LXP-LB-EU 8-10K LXP-LB-EU 12K	RS485/CAN	RJ45
Growatt	SPF 3500 -5000 ES SPF 6000 ES Plus	RS485/CAN	RJ45

Voltronic	Infini Solar V IV TWIN 6/6.5/ 8kw Axpert VM III Axpert VM IV Axpert MKS III Axpert MKS IV Axpert MAX Axpert MAX II	RS485	RJ45
Sunsynk	SUNSYNK-3.6/5/8K-SG01LP1 SYNK-8/10/12K-SG04LP3 SUNSYNK MAX	RS485/CAN	RJ45
Megarevo (official)	R(5-8)KLNA R(6-15)KH3 R(3-6)KL1	CAN/RS485	RJ45
Victron	To ensure successful communication, please use this Cerbo GX box to communicate with our battery. 	CAN	RJ45
SRNE (official)	HF4830S60-H/HF4850S80-H HF4835U60-H/HF4850U80-H HF4850S80 -145 HF4830U60 -145/HF4835U80 -145 HES48(80-120)S200-H HES48(80-120)U200-H HES48(40-60)S200-H	RS485	RJ45
Solis (official)	S6-EH1P(3-6)K-L-EU S6-EH1P8K-L-PRO S5-EH1P(3-6)K-L S6-EH3P(8-15)K02-NV-YD-L	CAN	RJ45

MPPsolar	PIP-MT series U-GK/U-MS series PIP-MKX series PIP-MAX series PIP-MGX series PIP-MK series PIP-GK series	RS485	RJ45
Afore	AF(1-3.6)K-SL AF(3-6)K-SL	CAN	RJ45
SOFAR	HYD 3000-6000-EP	CAN	RJ45
CHISAGE ESS (official)	MARS-5-14G2-LE MARS-5-14G1-LE JUP-5-10G2-LE	CAN	RJ45
SolaX Power (official)	X1-HYB-LV (3-6kw) X1-LITE-LV (8-12kw) X1-RENO-LV(8kW) X3-NEO-LV (5-20kw) OG (5kw/6kw)	CAN	RJ45
Sol-Ark	Sol-Ark 15K-2P-N Sol-Ark 12K / 8K / 5K (Outdoor) Sol-Ark 12K / 8K Legacy (Indoor)	CAN	RJ45
Hoymiles (official)	HYS-7.6LV-USG1 HYS-9.6LV-USG1 HYS-11.5LV-USG1	CAN	RJ45
INVT (official)	iMars XD3-6KTL	CAN	RJ45
AOHAI (official)	AH-3-6KSL-G2	CAN	RJ45
Amensolar	N3H-X5 / 8 /10-US	CAN	RJ45

SAJ	SAJ H1 3-6KW S2	CAN	RJ45
Solplanet	ASW H-S2 Series	CAN	RJ45
GOODWE	GW5048D-ES GW5000-SBP GW3600-SBP	CAN	RJ45
Shinemann	M5000H-48BP	CAN	RJ45
Sungrow (official)	MG-5/6/8/10-RL Series	CAN	RJ45

Felicitysolar® Make life full of hope

*The following Felicity low-voltage battery packs are compatible with the above-mentioned inverter brands for communication:

1. LPBA Series (BMS V5 Version)
2. LPBF Series (BMS V5 Version)
3. FLA Series
4. LUX Series (Low-Voltage Battery Pack)
5. FLS Series
6. FLB Series

Note: Our battery is using **PYLON protocol**, in theory, our battery can communicate with inverters that support the PYLON protocol. For additional support, please contact our customer service staff.

Whatsapp:

E-mail: technicalsupport@felicitysolar.com

The corresponding communication pins are defined in the following table. You can make communication cables according to this table.

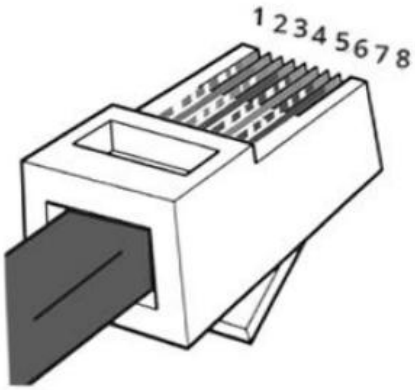

(1)RS485 Protocol pins defined.

	NO.	Felicitysolar	Deye	LuxPower	Growatt	Voltronic	MegaRevo	SRNE	Mppsolar	Sunsynk
RS485	Pin1	GND	RS485B	RS485B	RS485B	×	×	×	×	RS485-B
	Pin2	×	RS485A	RS485A	RS485A	×	×	GND	×	RS485-A
	Pin3	×	GND	×	×	RS485B	×	×	×	×
	Pin4	×	×	×	×	×	×	×	RS485-A	×
	Pin5	RS485B	×	×	×	RS485A	×	×	RS485-B	×
	Pin6	RS485A	GND	×	×	×	×	×	×	×
	Pin7	×	×	×	×	×	RS485A	RS485A	×	×
	Pin8	×	×	GND	×	GND	RS485B	RS485B	GND	×

(2)CAN Protocol pins defined.

	NO.	Felicitysolar	Victron	Solis	Deye	MegaRevo	Growatt	Afore	SOFAR	Luxpower	Sol-Ark	Hoymiles
CAN	Pin1	×	×	×	×	×	×	×	CAN_H	×	×	×
	Pin2	×	×	×	×	×	×	×	CAN_L	×	×	×
	Pin3	CAN_L	×	×	×	×	×	×	×	×	×	×
	Pin4	CAN_H	×	CAN_H	CAN_H	CAN_H	CAN_H	CAN_H	×	CAN_H	CAN_H	CAN_H
	Pin5	×	×	CAN_L	CAN_L	CAN_L	CAN_L	CAN_L	×	CAN_L	CAN_L	CAN_L
	Pin6	×	×	×	×	×	×	×	×	×	×	×
	Pin7	CAN_L (LUX-E-48100LG04)	CAN_H	×	×	×	×	×	×	×	×	×
	Pin8	CAN_H (LUX-E-48100LG04)	CAN_L	×	×	×	×	×	×	×	×	×

(3)For example, if you want to let our LPBA48100-OL battery to communicate with Victron inverter directly, you need to make a communication cable like the one below.
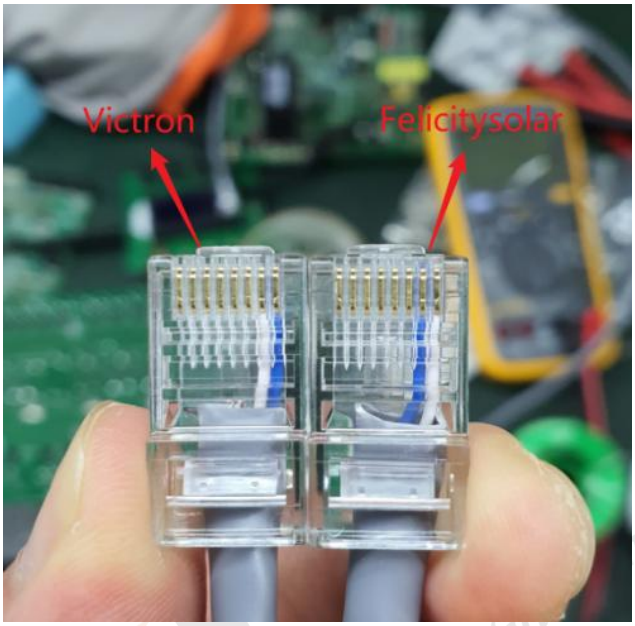
	NO.	Felicitysolar	Victron
CAN	Pin1	×	×
	Pin2	×	×
	Pin3	×	×
	Pin4	×	×
	Pin5	×	×
	Pin6	×	×
	Pin7	CAN_L	CAN_H
	Pin8	CAN_H	CAN_L